User's Manual

Line Scan Camera

Type: XCM8085DLMT8

NIPPON ELECTRO-SENSORY DEVICES CORPORATION

For Customers in the U.S.A.

This equipment has been tested and found to comply with the limits for a Class A digital device, in accordance with Part 15 of the FCC Rules. These limits are designed to provide reasonable protection against harmful interference when the equipment is operated in a commercial environment. This equipment generates, uses, and can radiate radio frequency energy and, if not installed and used in accordance with the instruction manual, may cause harmful interference to radio communications. Operation of this equipment in a residential area is likely to cause harmful interference, in which case the user will be required to correct the interference at his or her own expense.

For Customers in the EU

This equipment has been tested and found to comply with the essential requirements of the EMC Directive 2004/108/EC, based on the following specifications applied:
EU Harmonised Standards
EN55022:2010 Class A
EN61000-6-2:2005

Warning
This is a class A product. In a domestic environment this product may cause radio interference in which case the user may be required to take adequate measures.

Directive on Waste Electrical and Electronic Equipment (WEEE)
Please return all End of Life NED products to the distributor from whom the product was purchased for adequate recycling and / or disposal. All costs of returning the Product to NED are borne by the shipper.

Introduction

Thank you for purchasing NED's Line Scan Camera. We look forward to your continued custom in the future.

For safety use

- For your protection, please read these safety instructions completely before operating the product and keep this manual for future reference.
- The following symbols appear next to important information regarding safe product handling.

Warning	If the product is not handled properly, this may result in serious injury or possible death.
Caution	If the product is not handled properly, this may result in physical injury or cause property damage.

Safety precaution

Warning

- Never disassemble or modify this product, unless otherwise specified to do so in this manual.
- When hands are wet, avoid handling this product and do not touch any of the connection cable pins or other metallic components.
- Do not operate this product in an environment that is exposed to rain or other severe external elements, hazardous gases or chemicals.
- If the product is not to be used for an extended period of time, as a safety precaution, always unplug the connection cable from the camera unit.
- If the product installation or inspection must be executed in an overhead location, please take the necessary measures to prevent the camera unit and its components from accidentally falling to the ground.
- If smoke, an abnormal odor or strange noise is emitted from the camera unit, first turn off power, then unplug the cable from the camera unit.
- This product is not intended for use in a system configuration built for critical applications.

Instructions before use

- Only operate this product within the recommended environmental temperature range.
- Use only the specified power source and voltage rating.
- Do not drop this product. Avoid exposure to strong impact and vibrations.
- Install the camera unit in a well-ventilated environment, in order to prevent the camera from overheating.
- If the camera must be installed in an environment containing dust or other particles, take required measures to protect the camera unit from dust adhesion.
- Do not unplug the cable while power is being supplied to the camera unit. To prevent product damage, always shut down the power supply before unplugging the power cable.
- When the surface of the camera window becomes dirty due to dust or grime, black smudges appear in the displayed image. Use an air blower to remove the dust particles. Dip a cotton swab into ethanol alcohol and clean the camera window. Be careful not to scratch the glass.
- Use of non-infrared lighting such as a daylight fluorescent lamp is recommended. If halogen lighting is employed, always install an infrared filter into your system configuration.
- Please note that exposure to long wavelength light outside of the sensors visible optical range can affect the image.
- Sensitivity may fluctuate depending on the spectral response level of the light source.In cases like this, changing the light source to one with a different spectral response level may reduce this problem.Moreover, this irregular sensitivity can be completely lost by using 4.11 pixel correction functiom.Please refer to 4.11 pixel correction function for details.
- Please note that when the sensor is exposed to excessive quantities of light, blooming may occur. because this product does not have a special Anti-Blooming function.
- For stabilized image capturing, turn on the power supply and execute aging for ten to twenty minutes before actually using the camera unit.
- Do not share the power supply with motor units or other devices that generate noise interference.
- Do not disconnect the camera while rewriting an embedded memory.

Product Warranty

Warranty Period

- The product warranty period, as a general rule, is two years from purchase; however for detailed conditions please contact the sales representative for your region/country.
- However, in some cases due to the usage environment, usage conditions and/or frequency of use, this warranty period may not be applicable.

Warranty Scope

- Product repair will be performed on a Return To Manufacturer basis. On-site maintenance will incur additional charges.
- If defects in material or workmanship occur during the warranty period, the faulty part will be replaced or repaired by us free of charge. Return shipping charges must be paid by the sender. However, the following cases fall outside of the scope of this warranty:

Exclusions from Warranty Coverage

- We will under no circumstances assume responsibility for the following cases: damage caused by fire, earthquake, other acts of a third party, other accidents, negligent or intentional misuse by the user, or other usage under extraordinary circumstances.
- Damages (e.g. loss of business profits, business interruption, etc.) resulting from use or non-use.
- Damages caused by use other than as described in this document.
- Damages resulting from malfunction due to a connected device.
- Damages resulting from repairs or modifications performed by the customer.

Fault Diagnosis

- As a general rule, in the first instance fault diagnosis should take the form of a telephone call or an email to enable us to assess the circumstances of the malfunction.
- However, depending on the customer’s requests, we, or our agent, may require an additional fee for this service.

Exclusion of Liability for Compensation for Missed Opportunities

- Regardless of whether within the warranty period or not, our warranty does not cover compensation for missed opportunities for our customers, or our customers' customers, caused by a fault of our products, nor for damage to products other than our own, or related business.

Note about Product Usage

- This product has been designed and manufactured as a general-purpose product for general industry. In applications expected to be life-critical or safety-critical, the installer or user is requested to install double or triple failsafe systems.

Repair Service Outline

- The cost of dispatching engineers etc. for repair service is not included in the price of purchased and supplied goods. On request, arrangements can be made separately.

Scope of Repair Service

- The above assumes business dealings and usage to take place in the customer's region / country. In cases of business dealings and/or usage outside the customer's region/country, separate consultation is required.

Table of Contents

1 Product Outline

1.1 Features

- 7μm 8192 pixels x 2, dual lines scan camera
- Low noise image with 2 lines TDI mode
- Choice of 2tap, 4tap or 8tap with 8192 pixels on data format
- Programming control of each line's exposure time
- Binning function on data format (14μm-square 4096 pixels_4tap and 4096 pixels_2tap equivalent by 2x2 pixels binning)
- On-chip A/D converter (8/10bit) on readout of all format
- Easy control of gain / offset / gamma exchange with software outside the camera.
- Easy connection with a variety of frame grabber boards via Camera Link interface
- Single power source DC 12V to 15V for operation
- PRNU / Shading correcting function
- The camera comes with a M72-Mount.

1.2 Application

- Inspection of transparent panels and PCBs
- Flat panel display inspection
- Inspection of glass and sheet-like objects
- Inspection of high speed moving objects
- This camera utilizes an Intelligent Transportation System
- Outdoor surveillance

An example of Visual Inspection of PCBs is shown below.

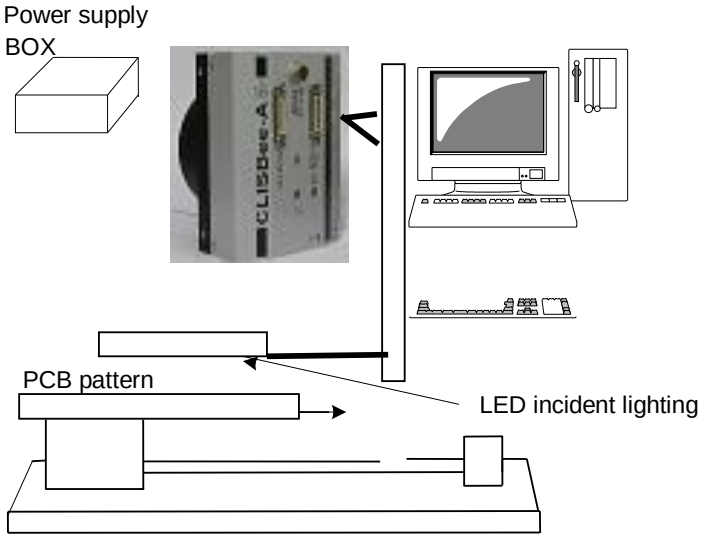

Figure 1-2-1 Visual Inspection of PCBs

Applicable Work

COB, BGA and MCM printed circuit boards

Unit Configuration

1. Camera: Line scan camera
2. Controller: Dedicated software for PC system

Applicable Fields

Inspection of patterns on film PCBs

1.3 Image Sensor

The camera uses a CMOS sensor with a maximum data rate of 680MHz to acquire high responsivity and superior quality images.

The sensor has pixels of 7μmx7μm in size and dual lines

The output data of 8192 pixels comes from 85MHz-8tap, 85MHz-4tap or 85MHz-2tap on TDI mode. Also, it comes as the output data of 4096 pixels with 14μm-square pixel equivalent from 85MHz_4tap or 85MHz_2tap by 2x2 pixels binning

In addition, the output data rate can be selected at 40MHz by setting the camera link clock.

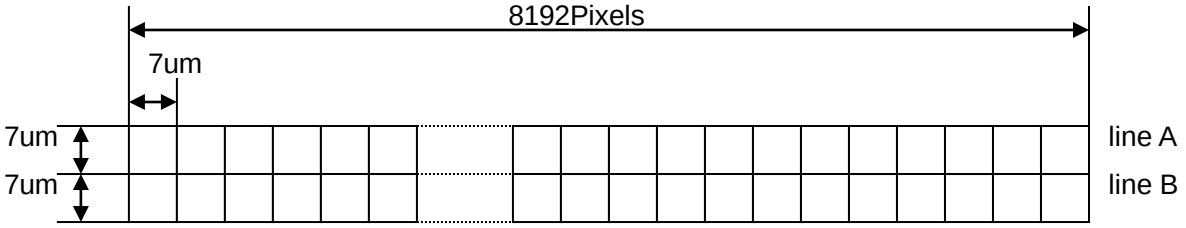

（View from camera mount side when the camera screw hole for a tripod is at the bottom）

4096 pixels with 14μm-square pixel equivalent by 2x2 pixels binning

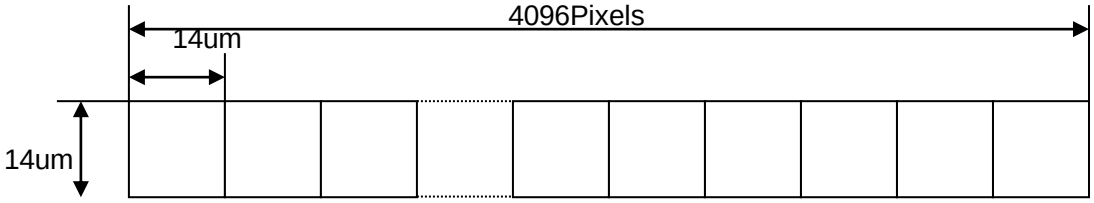

1.4 Performance Specifications

The Performance Specifications are shown in Table 1-4-1. It shows the data when the camera is operating at maximum scan rate, unless otherwise specified.

Table 1-4-1 Performance Specifications

Items		Specifications
Number of Pixels		8192x2(Dual lines)
Pixel Size H x V (μm)		7 x 7
Sensor Length (mm)		57.344
Data Rate (MHz)		680 (85x8)
Max. Scan rate [kHz]/ Min. Scan period (μs)	8k 8tap	77.55 / 12.89
	8k 4tap	41.32 / 24.20
	8k 2tap	21.67 / 46.14
	4k 4tap	77.55 / 12.89
	4k 2tap	41.32 / 24.20
Responsivity (V/[lx･s]) (typically) [Minimum Gain, Pixel Correction Initial Value]		125 ∗Daylight Fluorescent Light ∗Analog 5V Conversion Sensitivity
Gain Adjustable Range *Analog Amplifier +Digital		Analog Amplifier : x 1 to x 17.8 (8 Steps) Digital : x 1 to x 2 (512 Steps)
Offset Adjustable Range *Digital		-127 to 127 (0.5DN / Steps): 8bit
FPN (Fixed Pattern Noise)		Typically 5%(without correction, at minimum gain) 2%(with correction, at minimum gain)
PRNU (Photo Response Non Uniformity)		Typically 8% (without correction, at minimum gain) 4%(with correction, at minimum gain)
Random Noise		Typically 10DN (peak value at minimum gain)
Video output		Camera Link(full/medium/base) ①8,10bit/8192pixels 8,4,2tap Camera Link (full/medium) ②8,10bit/8192pixels x2(all pixel readout)/8,4tap Camera Link (medium/base) ③8,10bit/4096pixels 4,2tap(2x2pixels binning)

Control Input		CC1: External Trigger Signal, CC2-4: Not in use
Connectors	Data/Controller	3M: MDR26 [Camera Link] x 2
	Power Supply	Hirose: HR10G (6Pin)
Lens Mount		Standard: M72 Mount
Operating Temperature (˚C) No Condensation		0 to 50
Power Supply Voltage (V)		DC 12 to 15 [+/-5%]
Consumption Current (mA) (typically)		700 (DC12V)
Size W x H x D (mm)		80x110x62
Mass (g) (Camera only)		Approx.630
Additional Function		1. Two-line TDI (8/4/2tap output) 2. Programmable Exposure Control of each line 3. 4096 pixels 4/2tap output by 2x2 pixels binning 4. Test Pattern Output On / Off 5. Scan Direction Switching 6. Display of internal camera temperature

Note:

*1) DN : Digital Number (8bit : 0-255)

*2) Measurements were made at room temperature.

The spectral responsivity is shown below.

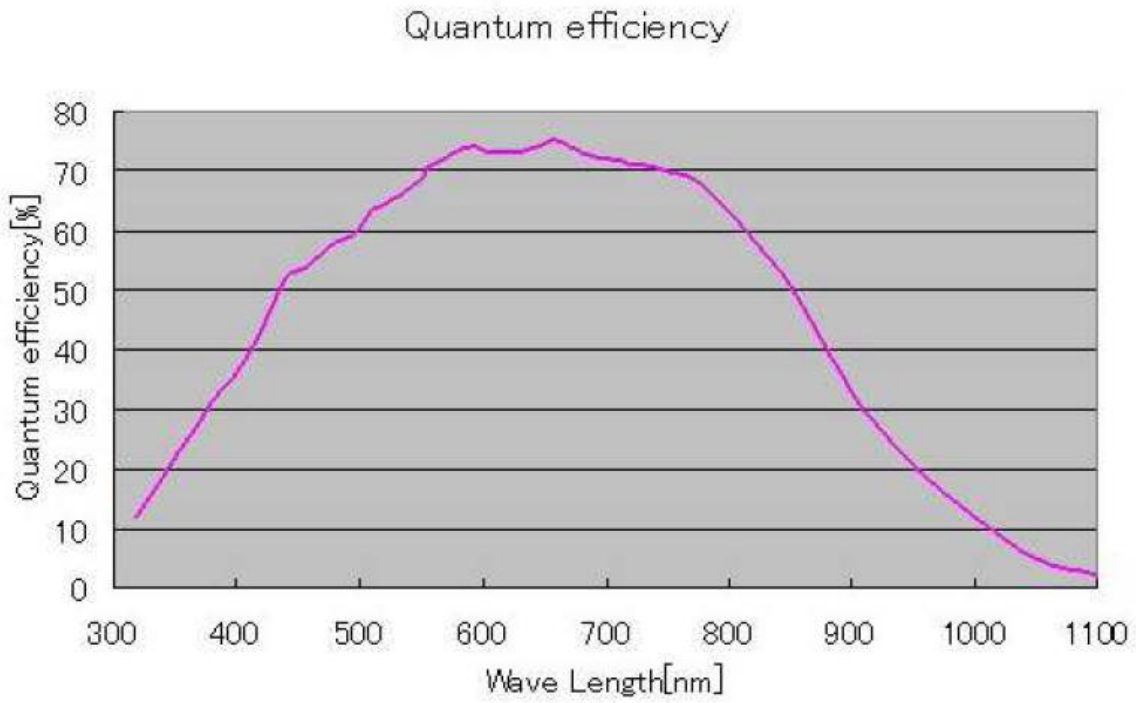

Figure 1-4-1 Spectral Responsivity

2 Camera Setting and Optical Interface

2.1 Setting the Camera

Use the M4 screw holes or the tripod screw hole to set the camera.
An optional base holder is also available as accessory.

2.2 Fixing the Camera

Use the M4 screw holes (4 at the front, 8 at the side) to set the camera.
Or use the 1/4”-20UNC screw hole for a tripod (1 place at the side).
If using the front panel M4 mounting holes (4 places at the front, 8 places at the side), the screw length for fixing the camera should be less than 8mm at the front and less than 6mm at the side.
No X-, Y-axis orientation and tilt adjustment mechanism is available. Please prepare an adjustment mechanism if required.

The dimensions of the camera are shown below.

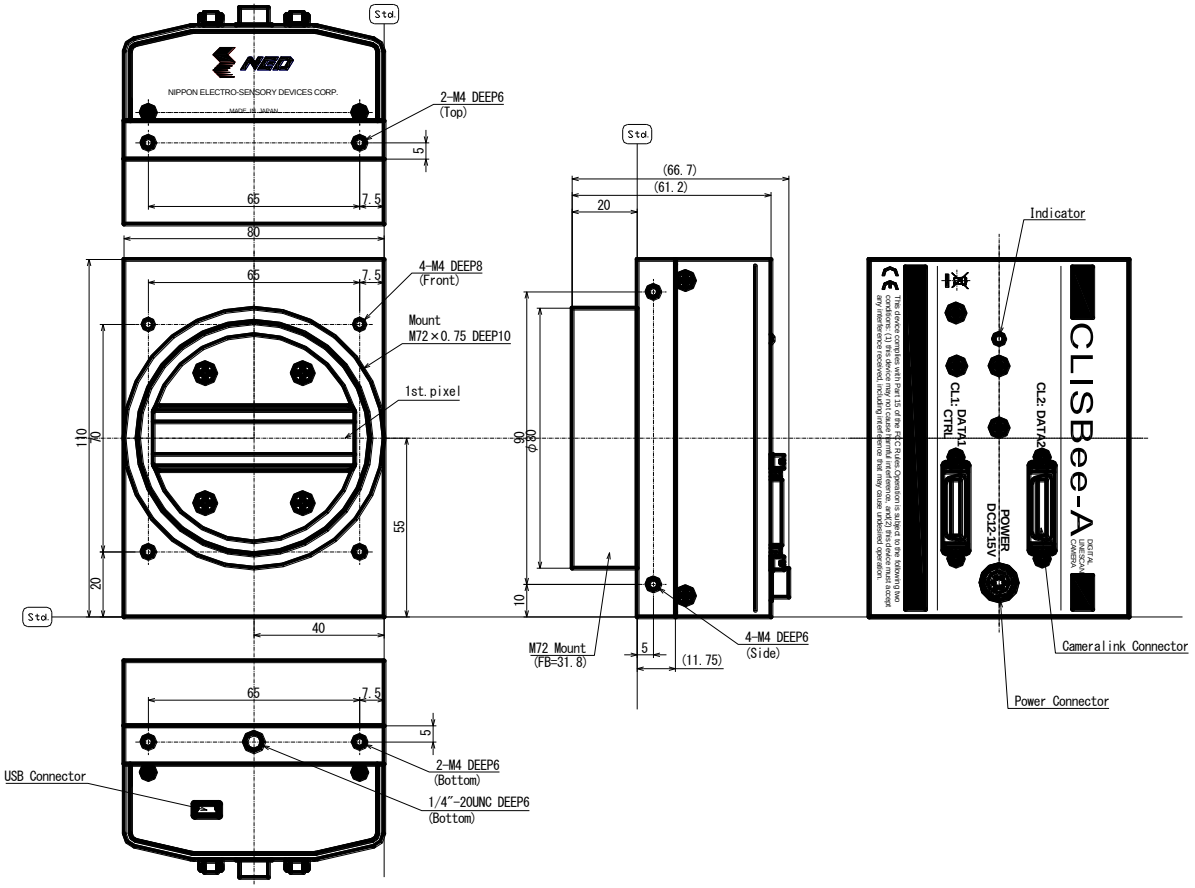

Figure 2-2-1 Dimensions of the Camera

2.3 Optical Interface

The XCM8085DLMT8 comes with M72-Mount as standard.

1) Quantities of light and the wavelength etc. of a source of light necessary to take the image for which the customer hopes are different according to the usage. The factor to decide these contains physical properties, the speed, the spectrum characteristic of the object taken a picture of, the exposure time, and the characteristic of the source of light and the specification etc. of the taking system.

It is a luminous exposure (exposure time × quantities of light) that it is important because an appropriate image is obtained. Please decide the exposure time and quantities of light after examining which element the customer values enough.

2) Keep these guidelines in mind when setting up your light source:

- LED light sources are relatively inexpensive, provide a uniform field and longer life span compared to other light sources. However, they also require a camera with excellent sensitivity.
- Halogen light sources generally provide very little blue light but have high infrared light (IR) proportions.
- Fiber-optic light distribution systems generally transmit very little blue light relative to IR.
- Metal halide light sources are very bright but have a shorter life span compared to other light sources.

3) Generally speaking, the brighter the light sources, the shorter the life span.

CMOS image sensors are sensitive to infrared (IR). We recommend using daylight color fluorescent lamps that have low IR emissions. If you use a halogen light source, to prevent infrared from distorting the images use an IR cut off filter that does not transmit wavelengths.

3 Hardware

3.1 Camera Connection

1. Connect the camera to the frame grabber board in the PC with two pieces of Camera Link cables.

   Notes:

   1) Use asymmetric Camera Link cables

   2) Connect the camera with the connector labeled as “Camera side” if Camera Link cables have transmission direction.

2. Connect the power to the camera.

   Notes:

   Use a power cable to connect the camera with the power source. Connect the plug end of the cable to the camera, and the open end to the power supply.

In addition, a personal computer, the frame grabber board, a lens, lens mount, a light source and an encoder, etc. may be required. Please choose equipment suitable for your application.

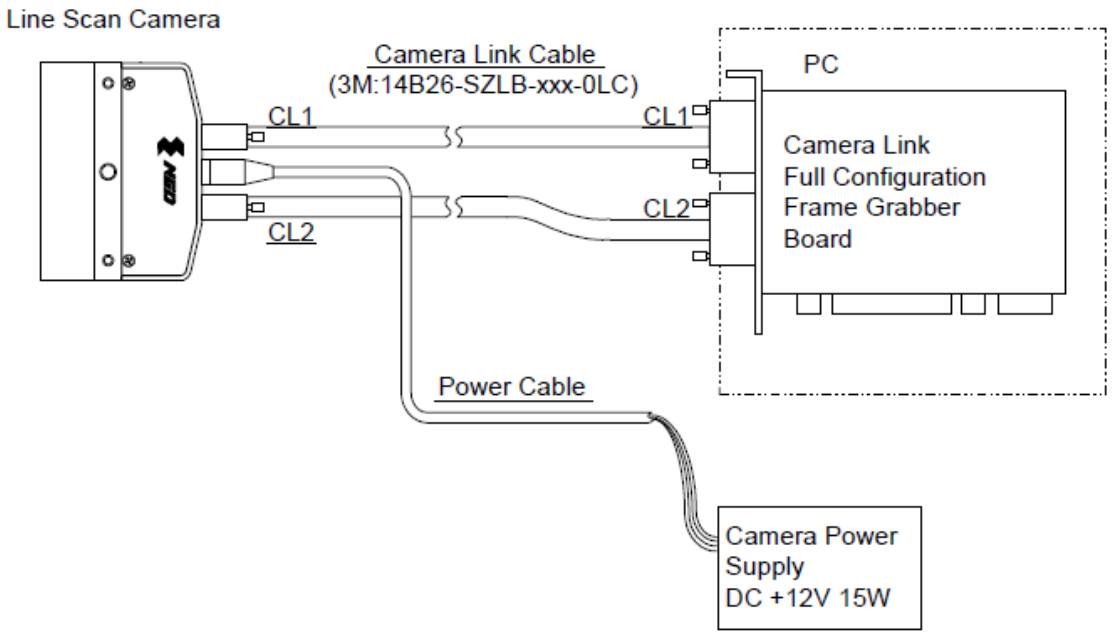

Figure 3-1-1 Connections between Camera and Frame Grabber Board and Power Supply

Camera Link cable manufacturers may have two types of cable for the Camera Link Full Configuration board. See the specification and choose the appropriate cable.

<Note: Choosing the appropriate Camera Link cable length >

According to the Camera Link Specification, the maximum cable length is 10m. But the maximum cable length to be able to transfer data depends on the type of cable performance and clock speed. The actual maximum transmission distance becomes less than 10m at faster clock speeds, though the transmission distance of 10m is feasible at slower clock speeds.

The following table shows values being calculated in accordance with the Camera Link Specification 2007.Version1.2, using a typical cable (14B26-SZLB-xxx-0LC from 3M) and frame grabber board (Solios from Matrox). Please choose the appropriate Camera Link cable type and length for your application. We recommend you perform a connection test in advance.

Table 3-1-1 Calculated value of maximum cable length

Solios model	clock speed (MHz)	maximum cable length (m)
SOL 6M CL E* (20～66MHz)	40	9.8
	66	8.0
SOL 6M FC E* (20～85MHz)	75	7.6
	85	5.8

3.2 Input / Output Connectors and Indicator

The layout of input /output connecters and the LED indicator are as follows.

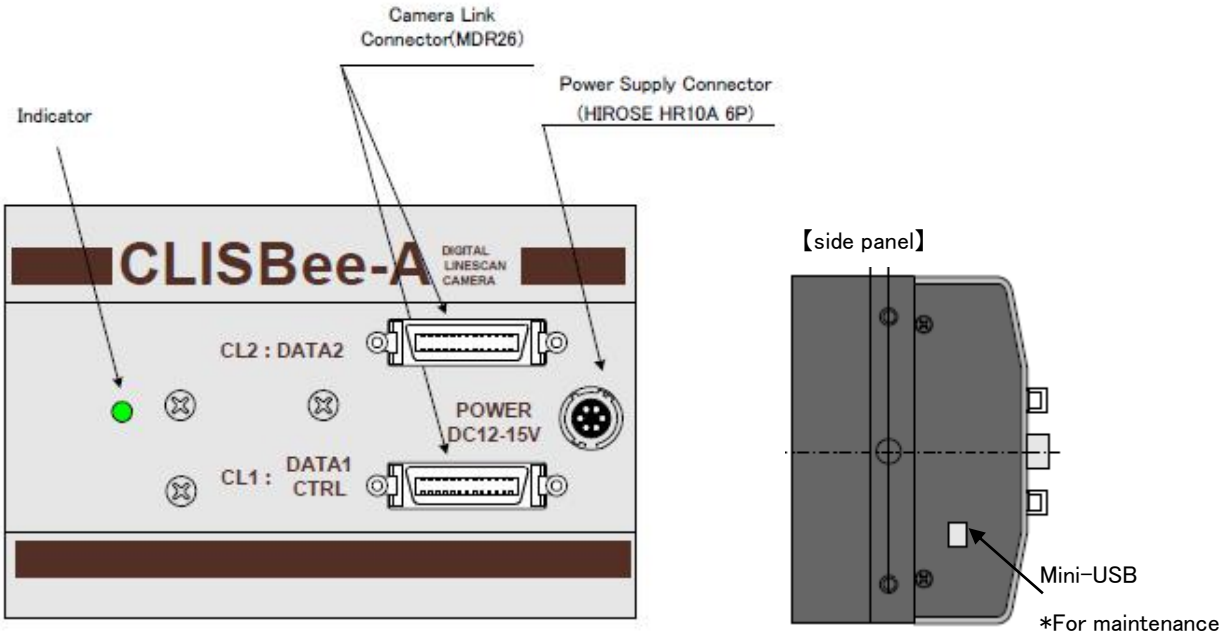

Figure 3-2-1 Input/Output Connectors and Indicator

3.3 Connectors・Pin Assignments・Cables

This camera adopts Full/Medium/Base Configuration of Camera Link interface standards. Figure 3-3-1 shows the interface for the camera and a typical implementation for the frame grabber interface.

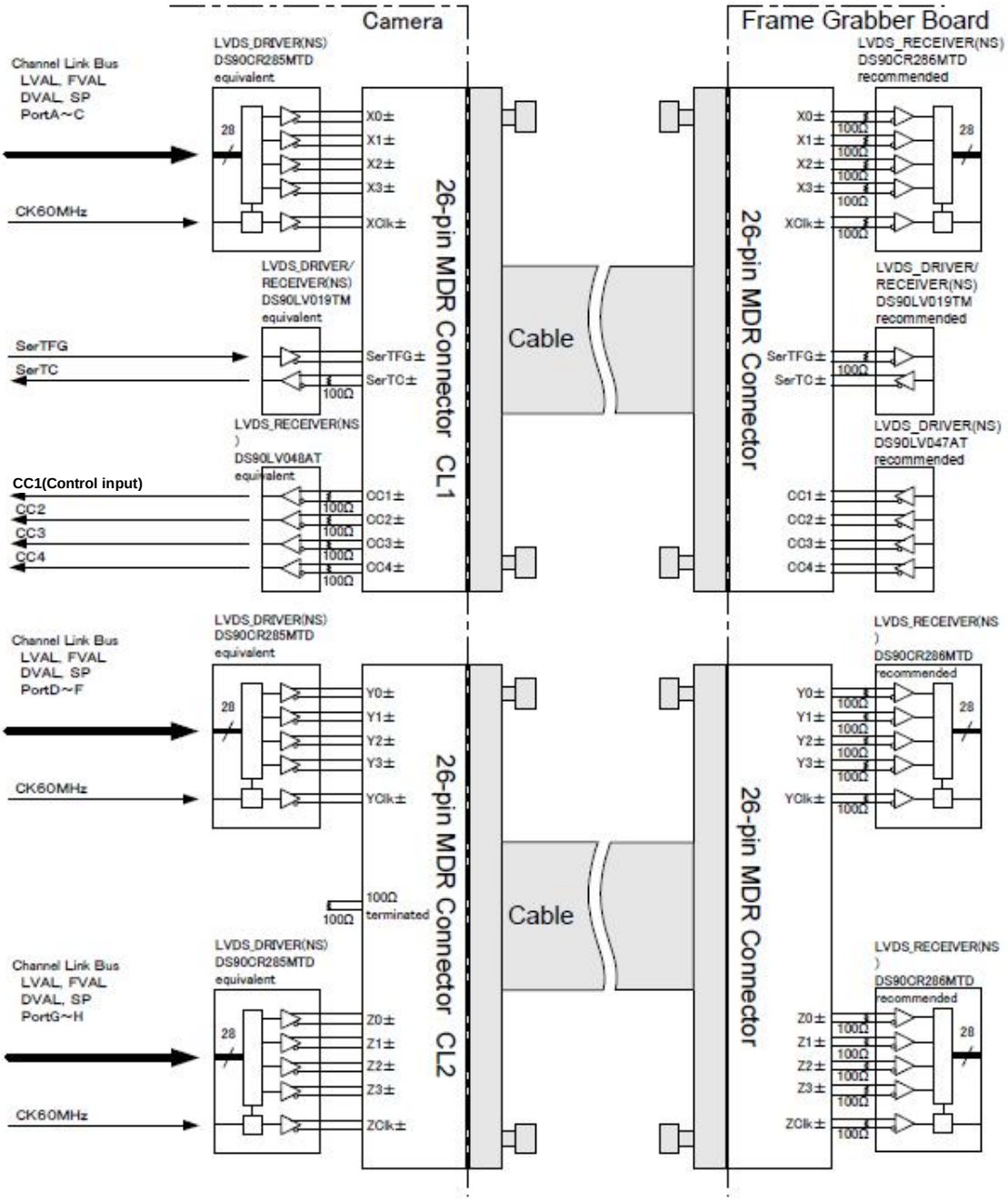

Figure 3-3-1 Camera / Frame Grabber Interface (Full Configuration)

Notes:

1) Do not make the driver side of LVDS open but set the logic to H or L, even if not used.
2) Set the LVDS, Channel Link receiver side to 100-ohm termination.

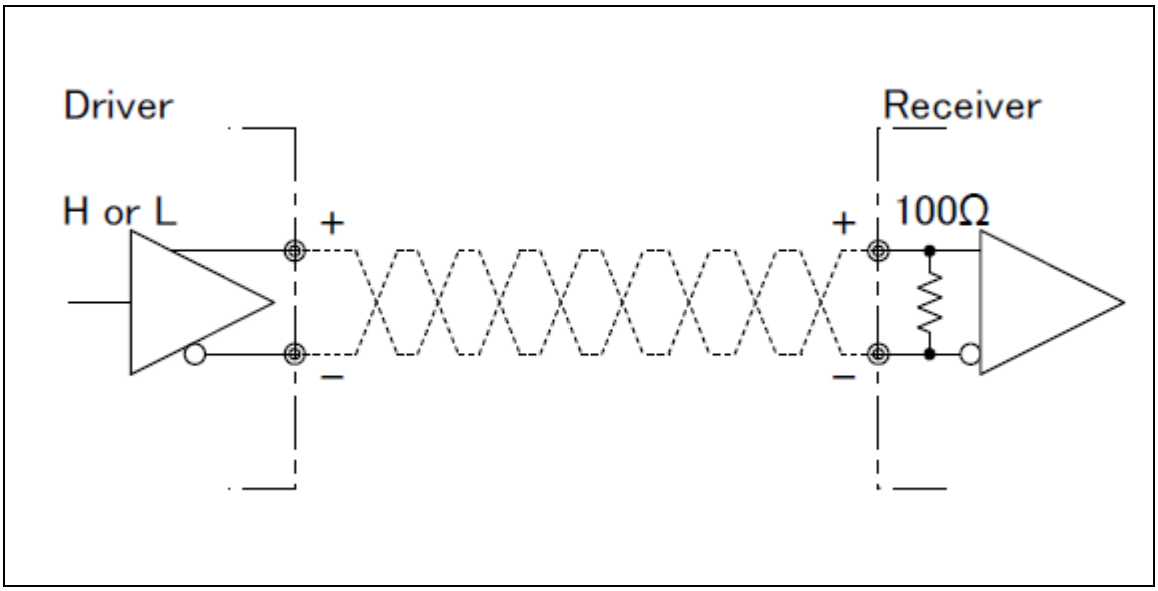

Figure 3-3-2 Circuit of LVDS

The camera has 26-pin MDR connectors for control signals of Camera Link, data signals and serial communications.

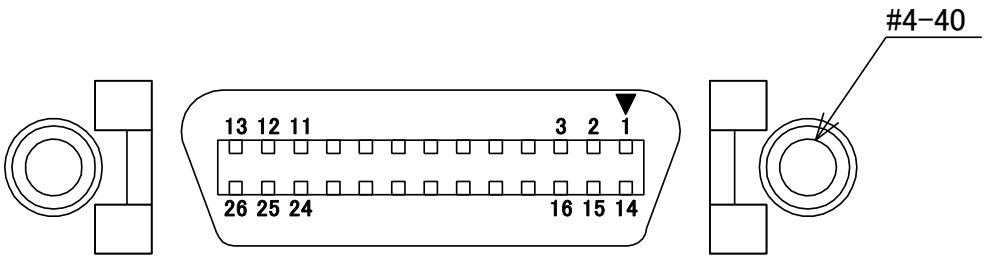

Figure 3-3-3 Camera Link Connector

- Half pitch (miniature half ribbon) shape
- Locking screw (UNC #4-40) type

Table 3-3-1 Camera Link Connector (26-pin MDR Connector) pin assignments

CL1 (Base Configuration)

No	NAME	No	NAME	I/O
1	Inner Shield	14	Inner Shield	
2	X0-	15	X0+	Out
3	X1-	16	X1+	Out
4	X2-	17	X2+	Out
5	Xclk-	18	Xclk+	Out
6	X3-	19	X3+	Out
7	SerTC+	20	SerTC-	In
8	SerTFG-	21	SerTFG+	Out
9	CC1-	22	CC1+	In
10	CC2+	23	CC2-	In
11	CC3-	24	CC3+	In
12	CC4+	25	CC4-	In
13	Inner Shield	26	Inner Shield	

CL2 (Full Configuration)

No	NAME	No	NAME	I/O
1	Inner Shield	14	Inner Shield	
2	Y0-	15	Y0+	Out
3	Y1-	16	Y1+	Out
4	Y2-	17	Y2+	Out
5	Yclk-	18	Yclk+	Out
6	Y3-	19	Y3+	Out
7	100Ω terminated	20	100Ω terminated	
8	Z0-	21	Z0+	Out
9	Z1-	22	Z1+	Out
10	Z2-	23	Z2+	Out
11	Zclk-	24	Zclk+	Out
12	Z3-	25	Z3+	Out
13	Inner Shield	26	Inner Shield	

- Explanation of Signals

Inner Shield: Shield cable (GND)

X0+, X0-…X3+, X3-: Data output (Channel Link)

Xclk+, Xclk-: Clock output for above data output synchronization (Channel Link)

Y0+,Y0-･･･Y3+,Y3- : Data output (Channel Link)

Yclk+,Yclk- : Clock output for above data output synchronization (Channel Link)

Z0+,Z0-･･･Z3+,Z3- : Data output (Channel Link)

Zclk+,Zclk- : Clock output for above data output synchronization (Channel Link)

SerTC+, SerTC- : Serial data input (LVDS)

SerTFG+, SerTFG-: Serial data output (LVDS)

CC1+, CC1- : External synchronous signal input (LVDS)

CC2+, CC2-, CC3+, CC3-, CC4+, CC4-: Not in use (LVDS)

- Camera Link compatible cable

3M: 14B26 –SZLB – xxx – 0LC by or equivalent

Notes:

1） To avoid uncoupling of the cable connectors during power on, make sure to clamp them with the locking screws.

2） Do not unplug the cables while power is being supplied to the camera.

This camera uses 6-pin round shape push-pull lock type connector for the Power Supply

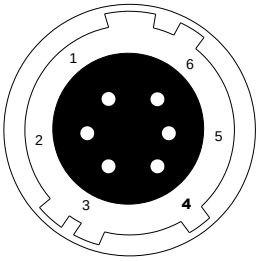

Figure 3-3-4 Power Supply Connector (HIROSE: HR10G-7R-6PB)

Table 3-3-2 Pin Assignment of Power Supply Connector

No	NAME
1	12 –15V
2	12 –15V
3	12 –15V
4	GND
5	GND
6	GND

3.4 Power Supply

The camera requires a single power supply (DC+12 to +15V).

The indicator (LED green) blinks when supplying power, and it will change into lighting in about ten seconds.

Notes:

1) When selecting a power source, choose one with the capacity to allow for inrush current. (15W or more recommended)
2) Insert the cable plug securely until it locks into position. This is to prevent the connector from coming loose during power transmission.
3) Turn off the power supply at once when the indicator (LED green) doesn't light even if supplied power. Make sure that the power supply is used on proper voltage and capacity and wiring arrangement is correct.
4) It is recommended that the shield processing of the power cable is connected with GND on the power supply side.

Acceptable Cable (Acceptable plug): DGPSH-10 (HIROSE: HR10A-7P-6S)

Power supply voltage: DC+12 –15V (+/-5%)

Consumption Current (rated): DC+12V: 700mA

◆ If the lamp fails to illuminate even after power is supplied, turn off power immediately. Inspect wiring. Check the voltage and capacity of the supplied power source.

4 Camera Control

The camera can be controlled through the serial communication.

Once the camera has been set up according to your requirements, the camera can be used to read data without need of controlling it via the serial interface.

4.1 Flow of Camera Control

4.1.1 Command Overview

The serial interface uses a simple ASCII-based command.

- Communication begins when the computer sends control commands to the camera.
- The camera receives and interprets the computer commands and then executes control operations accordingly.
- Transmission ends when the camera returns the analyzed results of the control commands to the computer.
- ◆ Always allow the previous transmission to end before starting the next transmission. (Only one command can be sent per transmission.)

4.1.2 Camera Receiving Message (PC Sending Command)

- Format 1 CMD CR
- Format 2 CMD□VAL 1 CR
- Format 3 CMD□VAL 1□VAL2 CR
- Format 4 CMD□VAL 1□VAL2□VAL3 CR

CMD**:** Control text (3 Bytes) Use 3 lowercase letters only. No numerals allowed.
CR**:** Carriage Return (0x0D)
□**:** Space (0x20) or Comma (0x2C)
VAL **:** Setting value (decimal, 1 Byte x maximum 5 digits)

<Example>
gax□0 CR

4.1.3 Camera Sending Message (PC Receiving Message)

- Format R 1 >R CR >[SB] CR EOT
- Format R 2 (for “sta” command) >OK CR >[MEM] CR >sta CR EOT

>: Results start text (0 x 3E)
R: Camera receive command analyzed results
[SB]: Camera receive command send back
[MEM]: Memory data readout value
CR**:** Separated text (0 x 0D)
EOT: Send command all text end text (0 x 04)

<Example>

>OK CR >gax 0 CR E0T

Table 4-1-3-1 Error Messages

Camera Response	Meaning
OK	Camera executed command
CMD ERR!	Command is not valid
CMD OVR ERR!	Command text line is too long
VAL ERR!	Parameter accepted was outside of specified
MEM ERR!	Camera memory error

4.1.4 Camera Control Commands

Table 4-1-4-1 shows the list of Camera Control Commands.

Table 4-1-4-1 Lists of Camera Control Commands

Control Item	CMD	VAL1	VAL2	VAL3	Control Description
Analog Gain	gax	0 to 7			x1.00....x17.8
Digital Gain	gdx	0 to 511			x1…x2(x0.003906/step)
Digital Offset	odx	-127 to 127			-127 to 127 (0.5DN/step at 8bit)
Exposure Mode	inm	0/1/2			Free Run / Ext Edge / Ext Level
Output Tap	tap	8/4/2			8tap / 4tap / 2tap(*1)
Display	disp	0/1			0: one display for single line, dual lines and 2x2 binning modes 1: two displays for 2disp-mode(2line)
Programmable Exposure Time (Setting line A and line B together)	int	1(fix)	914 to 1048575		10.75～12336.2μs(*2)
Programmable Exposure Time1 (for line A only)	inta	914 to 1048575			10.75～12336.2μs(*2) The values must be set as follows. (ExposureTime1)≧ (Exposure Time2）
Programmable Exposure Time2 (for line B only)	intb	914 to 1048575			10.75～12336.2μs(*2) The values must be set as follows. (ExposureTime1)≧ (Exposure Time2）
Memory Initializing	rst				Reset to factory settings
Memory Load	rfd				Readout setup data in memory
Memory Save	sav				Store present setup data in memory
Test Pattern	tpn	0 /1			Off/On
Black Pixel Correction Data Save	blk				User arbitrary black pixel correction data is acquired and stores it in the memory.
White Pixel Correction Data Save	wht				User arbitrary white pixel correction data is acquired and stores it in the memory.
Pixel Correction Setting	shc	0/1/2 /3/4/5	0 to 255		0: Correction Off 1: Factory black correction + factory

					white correction 2: Factory black correction + user arbitrary white correction 3: Not in use 4: User arbitrary black correction + factory white correction 5: User arbitrary black correction + user arbitrary white correction
Exposure-Readout Time	pad	0 to 1048575			2.165 to 12336.2μs
Operation Status Readout	sta				Returns the current camera settings.
Scanning Direction	rev	0 /1			0: Forward / 1: Reverse
Line Delay	d	-1/0/1			Output delay adjustment between line datas Amount of line data –1/0/1 Note: When using line delay mode setting at -1 or 1, vod must be set at 0 or 1.
Output Data Rate Setting	clkcl	85 / 40			85MHz/40MHz by setting Camera link clock
Output Signal Setting 1	voa	0/1			8bit /10bit
Output Signal Setting 2	vod	0/1/2 /3/4/5			0: Dual Lines Mode (average) 1: Dual Lines Mode (addition) 2: Single Line Mode (line A) 3: Single Line Mode (line B) 4: 2x2 binning(average) 5: 2x2 binning(addition)
Temperature	temp				The internal temperature of the camera is displayed. [℃]

(*1) The value of output tap means the number of taps for each line.

When you use 2 displays (disp=1), the value of output tap is equal to *half of the number of Camera Link taps*.

When you use 1 display (disp=0), the value of output tap is equal to the number of Camera Link taps.

(*2) Programmable Exposure Time＝VAL2÷85 Exposure-Readout Time＝2.141＋(VAL1÷85)

The minimum value of VAL2 is specified under the condition of 8tap selection.（See more information on 4.2.20 for Setting Output Tap Number.）

4.1.5 Memory Setup Values (Factory Settings)

The memory setup values (factory settings) are shown in Table 4-1-5-1.

Table 4-1-5-1 Memory Setup Values (Factory Settings)

Control Item	CMD	VAL1	VAL2	VAL3	Control Description
Analog Gain	gax	0			x1.00
Digital Gain	gdx	0			x1.00
Digital Offset	odx	0			0
Exposure Mode	inm	0			Free Run
Output Tap	tap	8			8tap
Display	disp	0			0: one display for single line, dual lines and 2x2 binning modes
Programmable Exposure Time (Setting line A and line B together)	int	1(fix)	10000		117.6μs(*1)
Programmable Exposure Time1 (for line A only)	inta	10000			117.6μs(*1)
Programmable Exposure Time2 (for line B only)	intb	10000			117.6μs(*1)
Test Pattern	tpn	0			Off
Pixel Correction Setting	shc	1	200		Factory black correction + factory white correction
Exposure-Readout Time	pad	0			2.141μs
Scanning Direction	rev	0			Forward
Line Delay	d	0			Line Delay 0(Line Delay setting is not used)
Output Data Rate Setting	clkcl	85			85MHz
Output Signal Setting 1	voa	0			8bit
Output Signal Setting 2	vod	0			Dual Lines Mode (Average)

4.2 Details on Commands

4.2.1 Setting Analog Gain

Sets analog gain in 8 steps between x 1 to x17.8

- Format 2 CMD□VAL1 CR
- CMD gax
- VAL1 0 (x1) to 7 (x17.8)

<Example>

gax□2 CR (Setting analog gain 2(x1.8))
>OK
>gax 2

4.2.2 Setting Digital Gain

Sets digital gain in 512 steps between x 1 and x 2.

- Format 2 CMD□VAL 1 CR
- CMD gdx
- VAL1 0(x 1) to 511(x 2)

<Example>

gdx□255 CR (Setting digital gain 255(1023/(1023-255)=x1.33))
>OK
>gdx 255

4.2.3 Setting Digital Offset

Sets digital offset -127 to 127(0.5DN/step at 8bit)

- Format 2 CMD□VAL1 CR
- CMD odx
- VAL1 -127 to 127

<Example>

odx□10 CR (Setting digital offset 8/10bit)
>OK
>odx 10

4.2.4 Setting Exposure Mode

Sets the exposure mode.

- Format 2 CMD□VAL1 CR
- CMD inm
- VAL1 0,1,2

<Example>

inm□0 CR (Setting the exposure mode free run)
>OK
>inm 0

4.2.5 Setting Exposure Time

There are three types (int/inta/intb) on setting exposure time as follows.

int ：Setting the exposure time for both line A and line B
inta：Setting the exposure time of line A
intb：Setting the exposure time of line B

Int:

【Sets the exposure time for both line A and line B】**int**

- Format 3 CMD□VAL1□VAL2 CR
- CMD int
- VAL1 1(fixed)
- VAL2 *914～1048575(Setting counter value)
  Note:*The ranges of these counter values vary according to output data formats as follows.

(85MHz at the output data rate setting)
[8192pixels_8tap] [4096pixels_4tap] 914～1048575
[8192pixels_4tap] [4096pixels_2tap] 1874～1048575
[8192pixels_2tap] 3922～1048575
(40MHz at the output data rate setting)
[8192pixels_8tap] [4096pixels_4tap] 2010～1048575
[8192pixels_4tap] [4096pixels_2tap] 4187～1048575
[8192pixels_2tap] 8538～1048575

<Example>

int□1□8500 <CR> （Setting exposure time 100μs）
>OK
>int 1,8500

Inta:

【Sets the exposure time for line A (without changing line B)】

- Format 2 CMD□VAL1 CR
- CMD inta
- VAL1 *914～1048575(Setting counter value)

  Note:*The ranges of these counter values vary according to output data formats as follows.

  Note: The exposure time values must be set as follows.

  Exposure time1(inta) ≧ Exposure time2(intb).

(85MHz at the output data rate setting)

[8192pixels_8tap] 914～1048575

[8192pixels_4tap] 1874～1048575

[8192pixels_2tap] 3922～1048575

(40MHz at the output data rate setting)

[8192pixels_8tap] 2010～1048575

[8192pixels_4tap] 4187～1048575

[8192pixels_2tap] 8538～1048575

<Example>

Inta□8500 <CR> （Setting exposure time 100μs）

>OK

>inta 8500

Intb:

【Sets the exposure time for line B (without changing line A)】

- Format 2 CMD□VAL1 CR
- CMD intb
- VAL1 *914～1048575(Setting counter value)

  Note:*The ranges of these counter values vary according to output data formats as follows.

  Note : The exposure time values must be set as follows.

  Exposure time1(inta) ≧ Exposure time2(intb).

(85MHz at the output data rate setting)

[8192pixels_8tap] 914～1048575

[8192pixels_4tap] 1874～1048575

[8192pixels_2tap] 3922～1048575

(40MHz at the output data rate setting)

[8192pixels_8tap] 2010～1048575

[8192pixels_4tap] 4187～1048575

[8192pixels_2tap] 8538～1048575

<Example>

intb□8500 <CR> （Setting exposure time 100μs）

>OK

>intb 8500

4.2.6 Memory Initializing (Initializing Camera Settings)

Resets the flash memory to the factory default.

- Format 1 CMD CR
- CMD rst

<Example>

```
rst CR
>OK
>Type=XCM8085DLMT8
>Ver.=1.09_0x0143
>Serial=0
>gax 0
>gdx 0
>odx 0
>inm 0
>int 1,10000
>pad 0
>shc 1,200
>tpn 0
>rev 0
>voa 0,0
>d 0
>tap 8
>disp 0
>vod 0
>clk 0
>inta 10000
>intb 10000
>rst
```

4.2.7 Memory Load

Reads out the camera settings from the flash memory.

- Format 1 CMD CR
- CMD rfd

<Example>

```
rfd CR
>OK
>Type=XCM8085DLMT8
>Ver.=1.09_0x0143
>Serial=0
>gax 0
>gdx 0
>odx 0
>inm 0
>int 1,10000
>pad 0
>shc 1,200
>tpn 0
>rev 0
>voa 0,0
>d 0
>tap 8
>disp 0
>vod 0
>clk 0
>inta 10000
>intb 10000
>rfd
```

4.2.8 Memory Save

Stores the current camera settings in the flash memory.

- Format 1 CMD CR
- CMD sav

<Example>

sav CR
>OK
>sav

4.2.9 Generating Test Pattern

Generates test pattern.

- Format 2 CMD□VAL1 CR
- CMD tpn
- VAL 0,1 (0:Image data, 1: Test pattern)

<Example>

tpn□1 CR (Generating test pattern)
>OK
>tpn 1

4.2.10 Black Pixel Correction Data Save

Saves the user arbitrary black pixel correction data in the flash memory.
The data at each step of the analog gain can be saved.
This command can be used in at peffect dark of the camera.

- Format 1 CMD CR
- CMD blk

<Example>

blk CR
>OK
>blk

4.2.11 White Pixel Correction Data Save

Saves the user arbitrary white pixel correction data in the flash memory.
The data at each step of the analog gain can be saved.

- Format 1 CMD CR
- CMD wht

<Example>

wht CR
>OK
>wht

4.2.12 Setting Pixel Correction

Sets pixel correction.

- Format 3 CMD□VAL1□VAL2 CR
- CMD shc
- VAL1 0: Correction off
  1: Factory black correction + factory white correction
  2: Factory black correction + user arbitrary white correction
  3: Not in use
  4: User arbitrary black correction + factory white correction
  5: User arbitrary black correction + user arbitrary white correction
- VAL2 0 to 255 (Setting correction level :8bit)

<Example>

shc□1□200<CR> (For factory white correction, Correction level 200)
>OK
>shc 1,200

4.2.13 Setting Exposure Time - Readout Time

Prolongs the line period without changing the exposure time.

- Format 2 CMD□VAL1 CR
- CMD pad
- VAL 0 to 1048575 (XCM8085DLMT8 : 0 to 12336.176μs)

<Example>

pad□10 CR
>OK
>pad 10

4.2.14 Returning the Camera Settings status

Returns the current camera settings.

- Format 1 CMD CR
- CMD sta

<Example>

```
sta CR
>OK
>Type=XCM8085DLMT8
>Ver.=1.04_0x0138
>Serial=0
>gax 0
>gdx 0
>odx 0
>inm 0
>int 1,10000
>pad 0
>shc 1,200
>tpn 0
>rev 0
>voa 0,0
>d 0
>tap 8
>disp 0
>vod 0
>clk 0
>inta 10000
>intb 10000
>sta
```

4.2.15 Setting Pixel Readout Direction

Sets the pixel readout direction.

- Format 2 CMD□VAL1 CR
- CMD rev
- VAL1 0,1 (0:Forward, 1:Reverse)

<Example>

```
rev□1 CR (Reverse)
>OK
>rev 1
```

4.2.16 Setting OutputSignal 1

Sets the data format of output signals.

- Format 3 CMD□VAL1□VAL2 CR
- CMD voa
- VAL 1 0,1 (output data 8bit / 10bit switching)

<Example>

voa□0□0 CR (8bit output)
>OK
>voa 0

4.2.17 Setting OutputSignal 2

Sets the camera output signal to Single Line / Dual Lines / 2x2 binning.

- Format 2 CMD□VAL1 CR
- CMD vod
- VAL 1

0 : Dual Lines Mode(average) (*1)
1 : Dual Lines Mode(addition) (*1)
2 : Single Line Mode(line A)
3 : Single Line Mode(line B)

4 : 2x2 binning Mode(average=Total output value of 4 pixels÷4) (*2)

5 : 2x2 binning Mode(addition=Total output value of 4 pixels) (*2)
6 : 2x2 binning Mode(Total output value of 4 pixels÷2) (*2)

(*1) Set the delay value using the “d” command at the Dual Lines-modes.
See 4.2.18 Setting Line Delay.

(*2) Set the value of output using the “tap” command at 2 or 4 on 2x2 binning modes.
See 4.2.20 Setting Output TAP Number.

Note:
Make sure that the “disp” command is set at 0 for one display.
If the “disp” command is set at 1, the setting of the “vod” command is ignored on this outputsignal2 setting.

<Example>

vod□1 CR （Dual Line Mode (addition)）

>OK
>vod 1

4.2.18 Setting Line Delay

Adjusts Line Delay between dual lines datas.

- Format 2 CMD□VAL1 CR
- CMD d
- VAL1 -1,0,1 (-1:Reverse, 0: No Line Delay, 1:Forward)

<Example>

d□1 CR (Line Delay 1)
>OK
>d 1

Note:
Sets the “vod” command at 0 or 1 to make Dual Lines (average/ addition) effective.

4.2.19 Setting Display

Sets one display or two displays

- Format 2 CMD□VAL1 CR
- CMD disp
- VAL 1 0,1 (0: one display / 1: two displays)

<Example>

disp□1 CR
>OK
>disp 1

Note:
Sets the “vod” command at 2 or 3 when the “disp” command is set at 1 for two displays(2disp).

4.2.20 Setting Output TAP Number

Selects output format to 8tap / 4tap / 2tap.

- Format 2 CMD□VAL1 CR
- CMD tap
- VAL
  8 : 8tap output
  4 : 4tap output
  2 : 2tap output

<Example>

tap□8 <CR> （8tap output）
>OK

>tap 8

NOTE: The value of output tap means the number of tap for each line.

When you use 2 displays (disp=1), the value of output tap is equal to half of the number of Camera Link taps.

When you use 1 display (disp=0), the value of output tap is equal to the number of Camera Link taps.

4.2.21 Temperature Display

Displays internal temperature of the camera.

- Format 1 CMD
- CMD temp

<Example>

Temp <CR>
>OK
> Camera Temp= 48.4 Celsius
>temp

4.2.22 Selecting Output Data Rate

Selects the output data rate at 85MHz or 40MHz by setting the camera link clock at 85 or 40.

- 書式 2 CMD□VAL1 CR
- CMD clkcl
- VAL1 85 : 85MHz
  40 : 40MHz

(Example)

clkcl 40 CR
>OK
>clkcl 40

The exposure time value may change automattically to become within a setable range when the camera link clock changes.
For example, the exposure time value was set in the minimum value at the output data rate of 85MHz before the camera link clock changes from 85 to 40.
That value was not within a setable range at the output data rate 40MHz. but the value changes automattically.
Make sure that the desired value is set. (sta)

4.2.23 Summary of Settings of Four Modes

This camera has four modes of Dual lines/Single line/2x2binning/2Displays.

The following table lists the settings values for each mode.

Table4-2-22 Summary of the settings of four modes

<table>
<tr><td rowspan="2">MODES</td><td>Display</td><td colspan="2">Output Signal</td><td>Line Delay</td><td rowspan="2">tap</td><td rowspan="2">Remarks</td></tr>
<tr><td>disp</td><td colspan="2">vod</td><td>d</td></tr>
<tr><td rowspan="2">Dual lines</td><td rowspan="7">0</td><td>0</td><td>Dual lines (Average)</td><td rowspan="2">-1/0/1</td><td rowspan="5">8/4/2</td><td rowspan="7">When you use one display (disp=0), the value of output tap is equal to the number of Camera Link taps.</td></tr>
<tr><td>1</td><td>Dual lines (Additional)</td></tr>
<tr><td rowspan="2">Single line</td><td>2</td><td>Single line (line A)</td><td rowspan="2">0</td></tr>
<tr><td>3</td><td>Single line (line B)</td></tr>
<tr><td rowspan="3">2x2 binning</td><td>4</td><td>2x2binning (Average)</td><td rowspan="3">0</td><td rowspan="3">4/2</td></tr>
<tr><td>5</td><td>2x2binning (Additional)</td></tr>
<tr><td>6</td><td>2x2binning (Additional ÷2)</td></tr>
<tr><td>2 Displays (2disp mode (2line))</td><td>1</td><td>2/3</td><td></td><td>-1/0/1</td><td>4/2</td><td>When you use 2 displays (disp=1), the value of output tap is equal to half of the number of Camera Link taps.</td></tr>
</table>

4.3 Digital Processing flow in FPGA

The digital processing flow in FPGA is shown below.

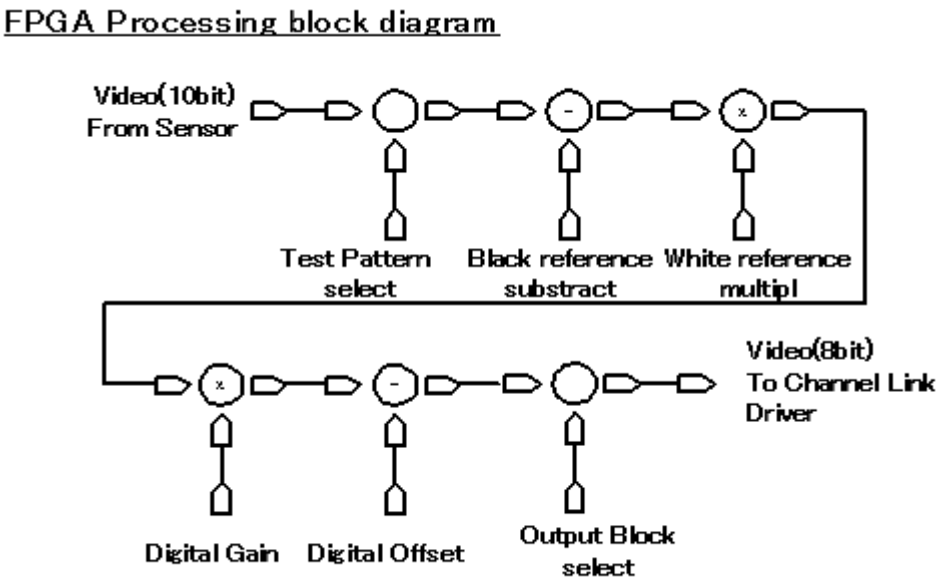

Figure 4-3-1 FPGA Processing Block Diagram

Note: When Test Pattern is selected, Black/White reference, Digital Gain & Offset are omitted.

4.4 Startup

After turning on, the camera run a startup procedure before it starts getting images and outputting data. It takes about ten seconds.

The start-up is executed by the following sequence, and as for the camera, the preparation for the image acquisition and the output is complete when normally ending.

(1)The camera hardware initializes.

(2) Reads out the latest camera settings from the flash memory. (User settings if any or factory default settings)

(3) Set up the camera with the setting value from the flash memory.

After this sequence, the camera is ready to get images and output data.

4.5 Saving and Loading Camera Settings

The camera settings data is saved in the internal memory (flash memory) and is loaded from the memory when turning on the power supply or loading (sending the "rfd" command).

Commands for rewriting the memory are as follows.

- Reset to factory settings (rst)
- Store present setup data in memory (sav)
- Store pixel correction data in memory (wht)

Notes:

1) The number of times the flash memory can be rewritten will vary depending on actual operational conditions.
2) After turning on the power supply, the camera always checks the memory status. When it is content outside a set range due to the breakdown etc., it automatically rewrites it in the memory setting value when the factory is shipped.
3) If the camera power is disconnected while rewriting the memory, the whole data saved in the memory will be deleted.
4) As it takes several seconds to rewrite the memory, do not disconnect power supply before receiving the answer from the camera.
5) Please do when you change the exposure mode from factory setting with external trigger signal (CC1) supplied from the frame grabber board side. If you do not send CC1 or sending control input signals are out of the designated range, you cannot get images and cannot change the settings. See 4.8.2 and 4.8.3.

Table 4-5-1 Camera Operation Mode and Control Input

Camera operation mode (Exposure mode)	Control input (From frame grabber board)
Free Run(Programmable time setting) (Factory Setting)	Not in use
Ext Edge (External trigger edge + Programmable time setting)	External trigger (CC1) is required
Ext Level (External trigger level time setting)	External trigger (CC1) is required

4.6 Serial Communication Settings

Serial communication is performed through the Camera Link Interface

Table 4-6-1 shows serial communication settings.

Table 4-6-1 Serial Communication Settings

Parameter Items	Setup Value
Communication Speed (Baud rate)	9600bps
Data Length	8bit
Parity Bit	None
Stop bit	1bit
Flow Control	None

4.7 Video Output Format

The camera outputs 8bit or 10bit digital data through 8tap, 4tap or 2tap.

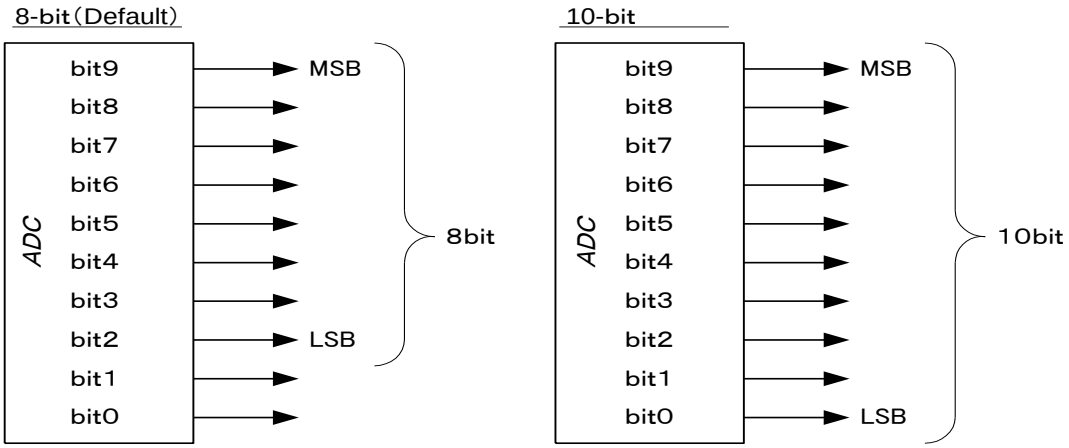

Figure 4-7-1 Pin Assignments of Digital Data

Video output phases of the camera are shown below.
This camera outputs 8/10 bit digital data through 8tap, 4tap, or 2tap formats.
One display or two displays can be set with the “disp” command.

【One display】disp=0

① This camera outputs 8/10 bit digital data through 8192pixels_8tap formats.

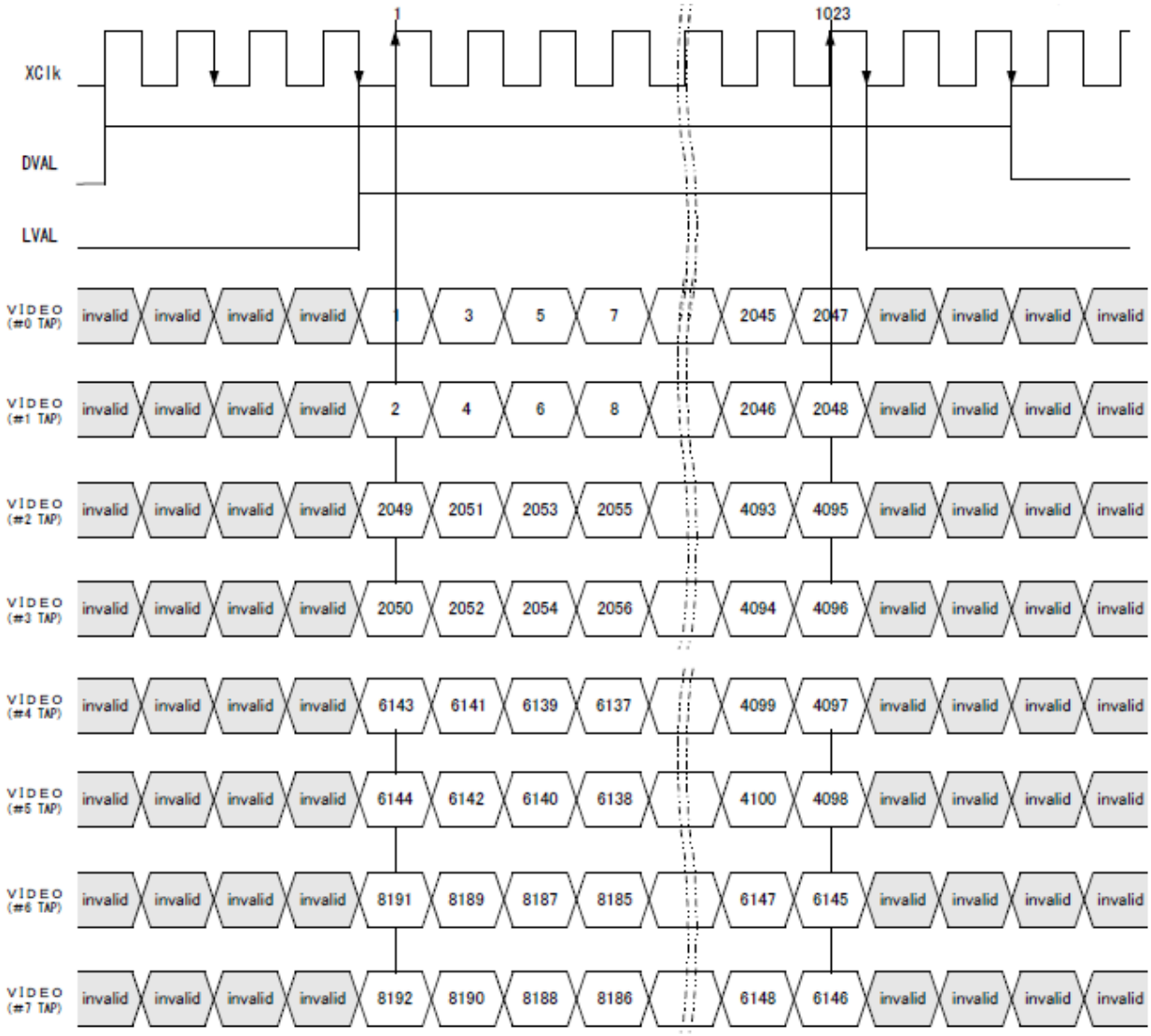

◆ FVAL = 0 (low level) fixed

Figure 4-7-2 Video Output Phase of the Camera at XCM8085DLMT8(8192pixels_8tap)

② This camera outputs 8/10 bit digital data through 8192pixels_4tap formats.

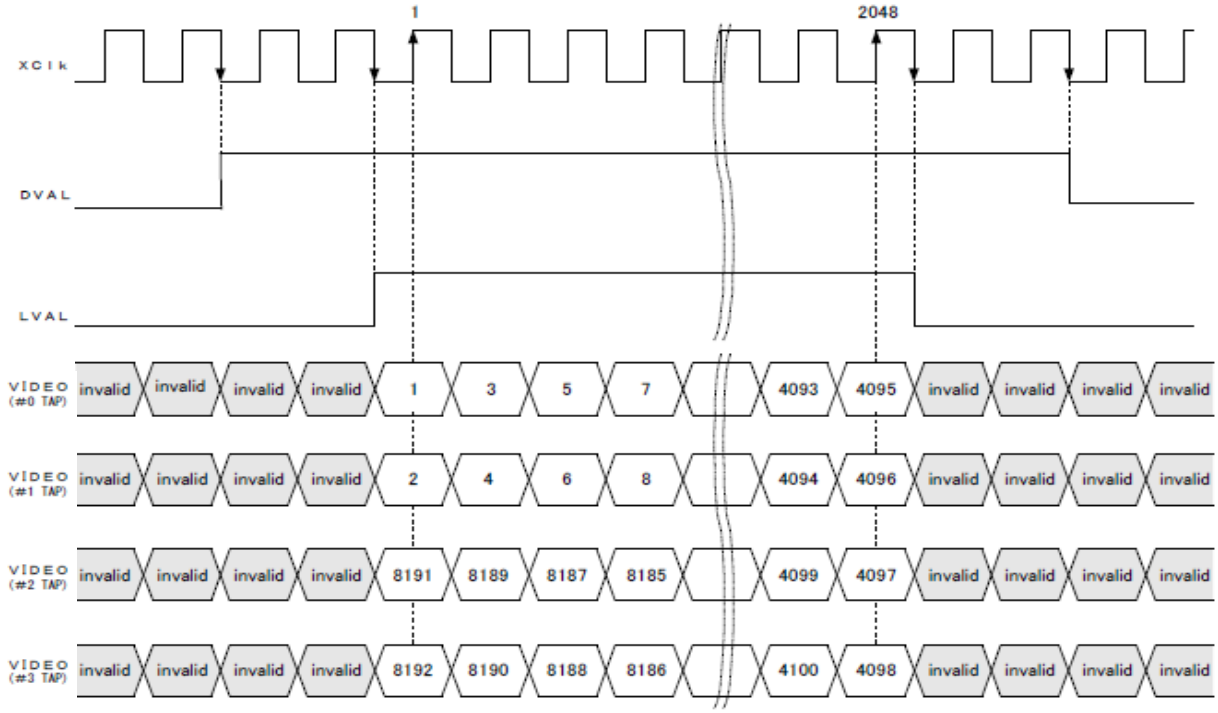

◆ FVAL = 0 (low level) fixed

Figure 4-7-3 Video Output Phase of the Camera at XCM8085DLMT8(8192pixels_4tap)

③ This camera outputs 8/10 bit digital data through 8192pixels_2tap formats.

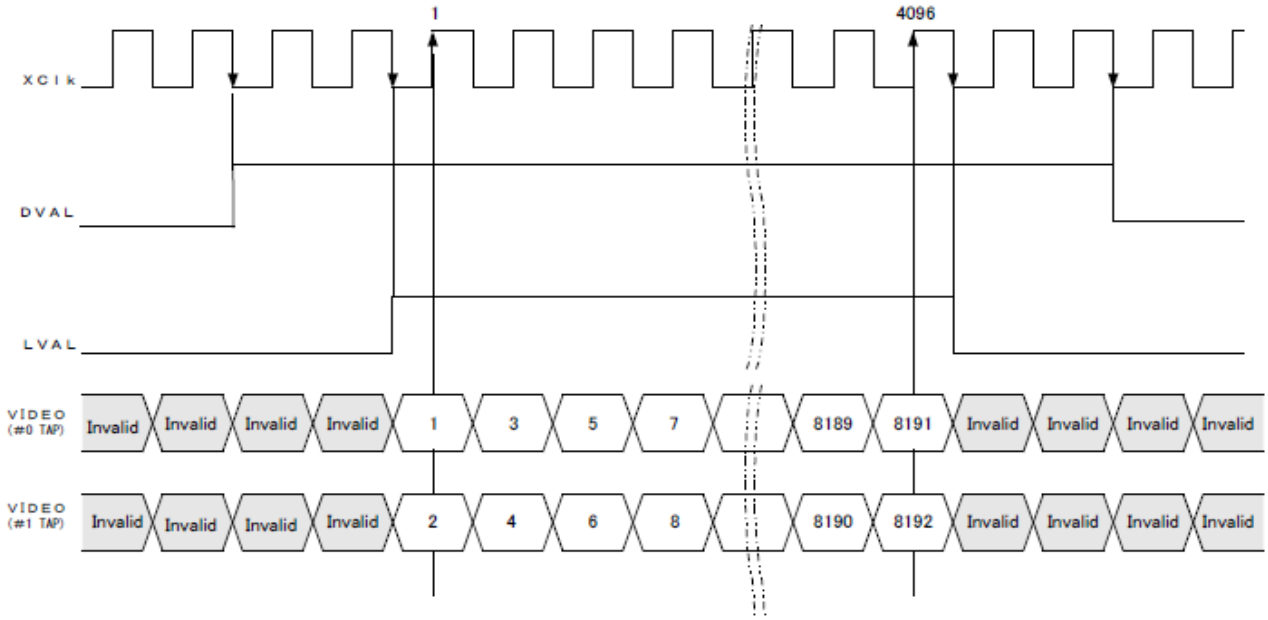

◆ FVAL = 0 (low level) fixed

Figure 4-7-4 Video Output Phase of the Camera at XCM8085DLMT8(8192pixels_2tap)

④ This camera outputs 8/10 bit digital data through 4096pixels_4tap formats
[2x2mode(tap=4 / vod=4 or vod=5)]

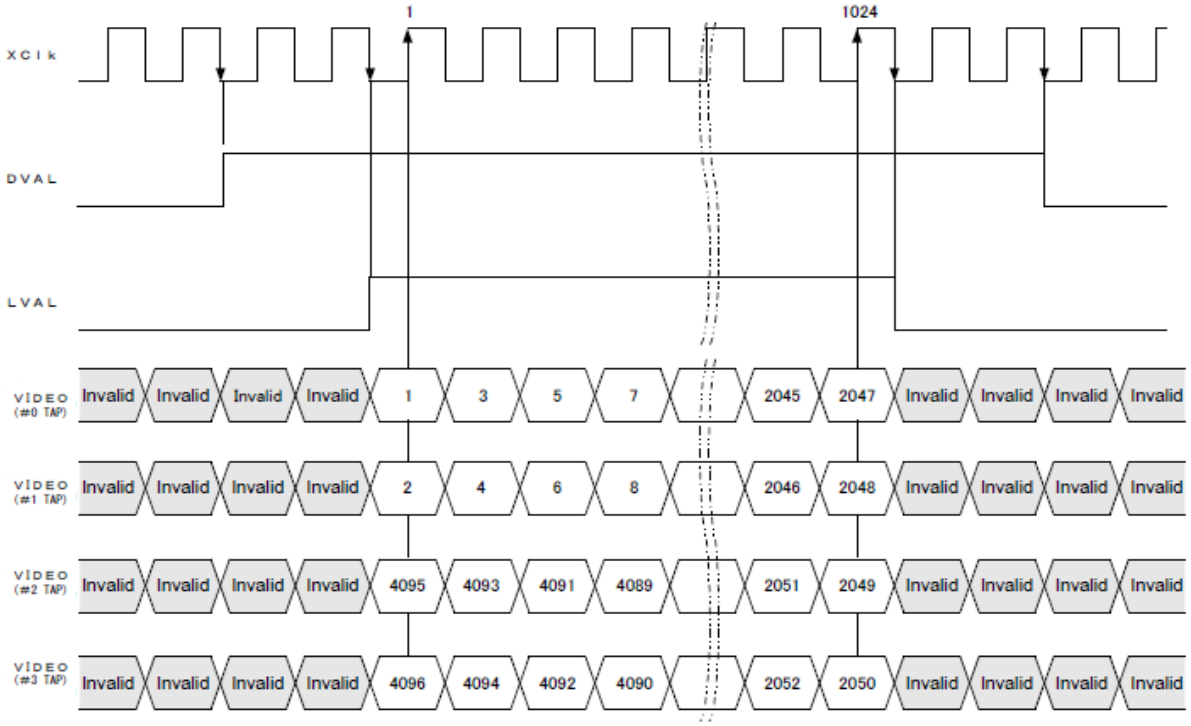

◆ FVAL = 0 (low level) fixed

Figure 4-7-5 Video Output Phase of the Camera at XCM8085DLMT8(4096pixels_4tap)

⑤ This camera outputs 8/10 bit digital data through 4096pixels_2tap formats
[2x2mode(tap=2 / vod=4 or vod=5)]

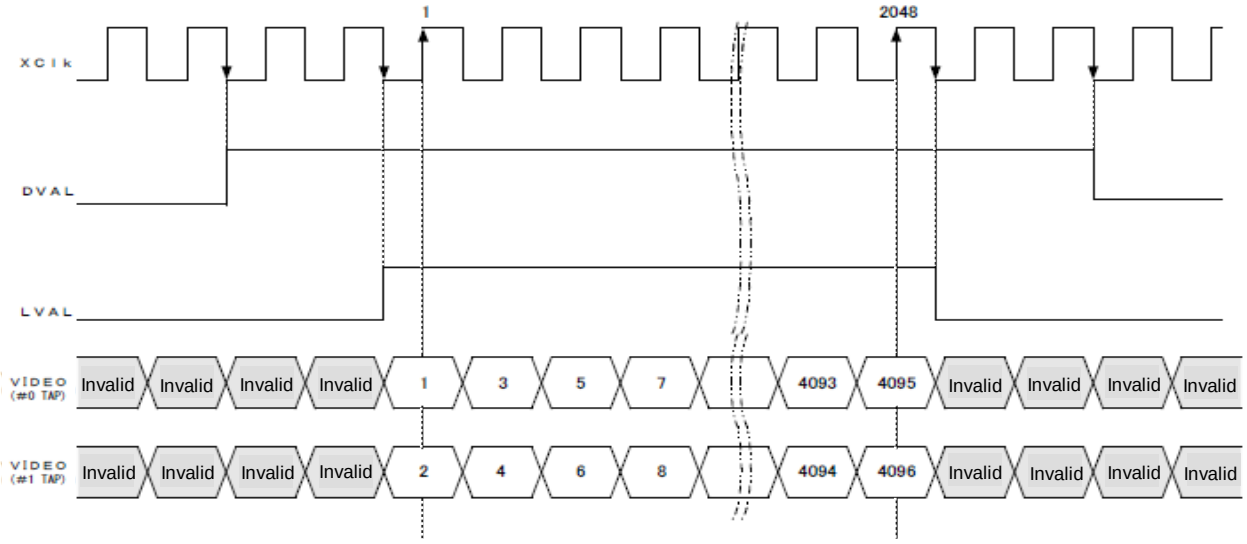

◆ FVAL = 0 (low level) fixed

Figure 4-7-6 Video Output Phase of the Camera at XCM8085DLMT8(4096pixels_2tap)

【Two displays】disp=1

Two displays mode can be set when the “disp” command is set at 1.
Set the “vod” command at 2(or 3) to make two displays mode effective.

⑥ This camera outputs 8/10 bit digital data through 16384pixels_8tap formats with two displays

■Command for 2 displays■
tap 4
disp 1
vod 2

Note: At two displays mode (disp=1), the value of output tap is equal to *half of the number of Camera Link taps* because the value of output tap is set at the number of tap for each line. The value of output is 4 when the number of Camera Link taps is 8.
(For reference: If one display (disp=0)is set, the value of output tap is equal to the number of Camera tap.)

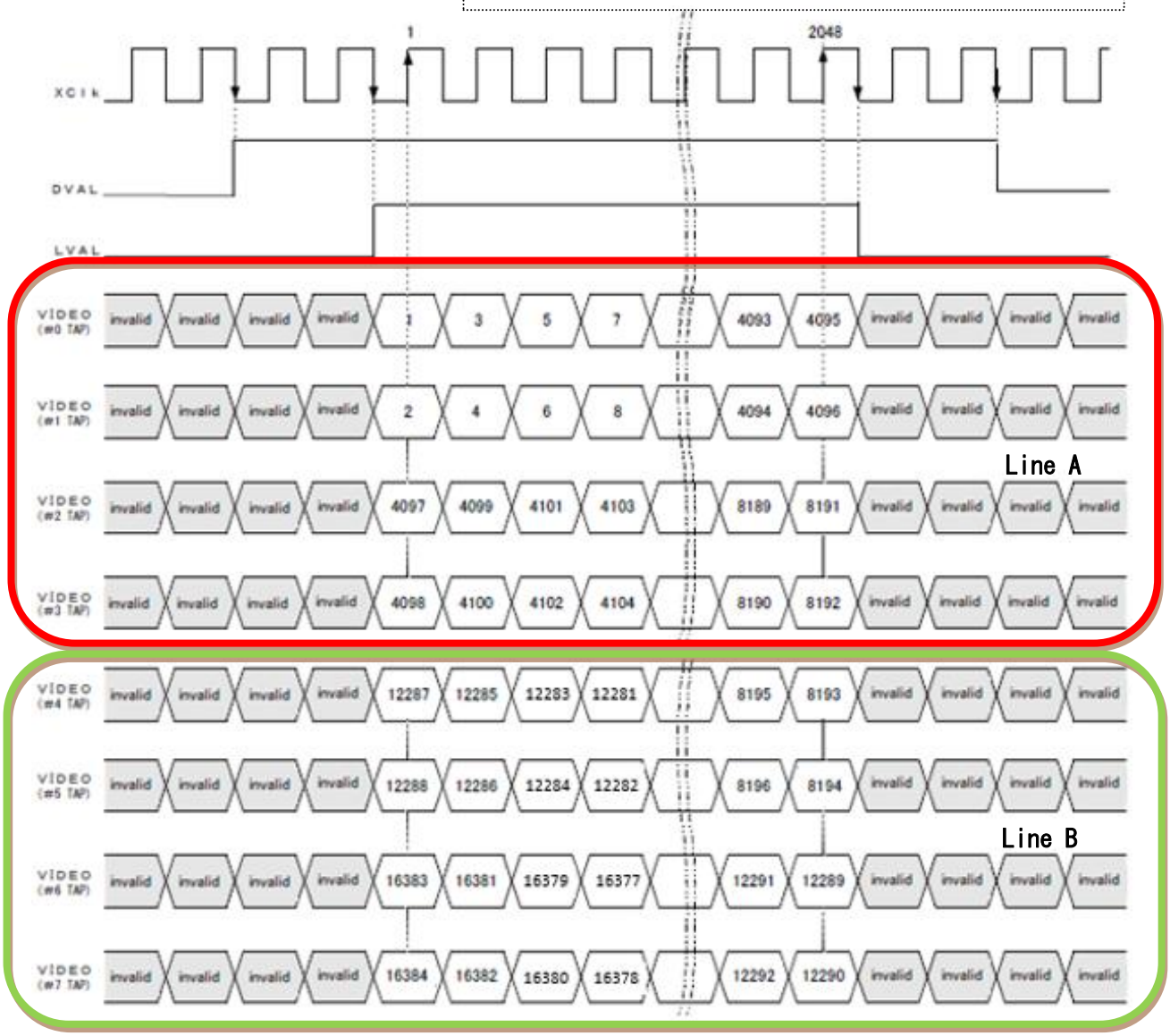

Figure 4-7-7 Video Output Phase of the Camera at XCM8085DLMT8(16384pixels_8tap)

⑦ This camera outputs 8/10 bit digital data through 16384pixels_4tap formats with two displays.

■Command for 2 displays■
tap 2
disp 1
vod 2

Note: At two displays mode (disp=1), the value of output tap is equal to *half of the number of Camera Link taps* because the value of output tap is set at the number of tap for each line.
The value of output is 2 when the number of Camera Link taps is 4. (For reference: If one display (disp=0) is set, the value of output tap is equal to the number of Camera tap.)

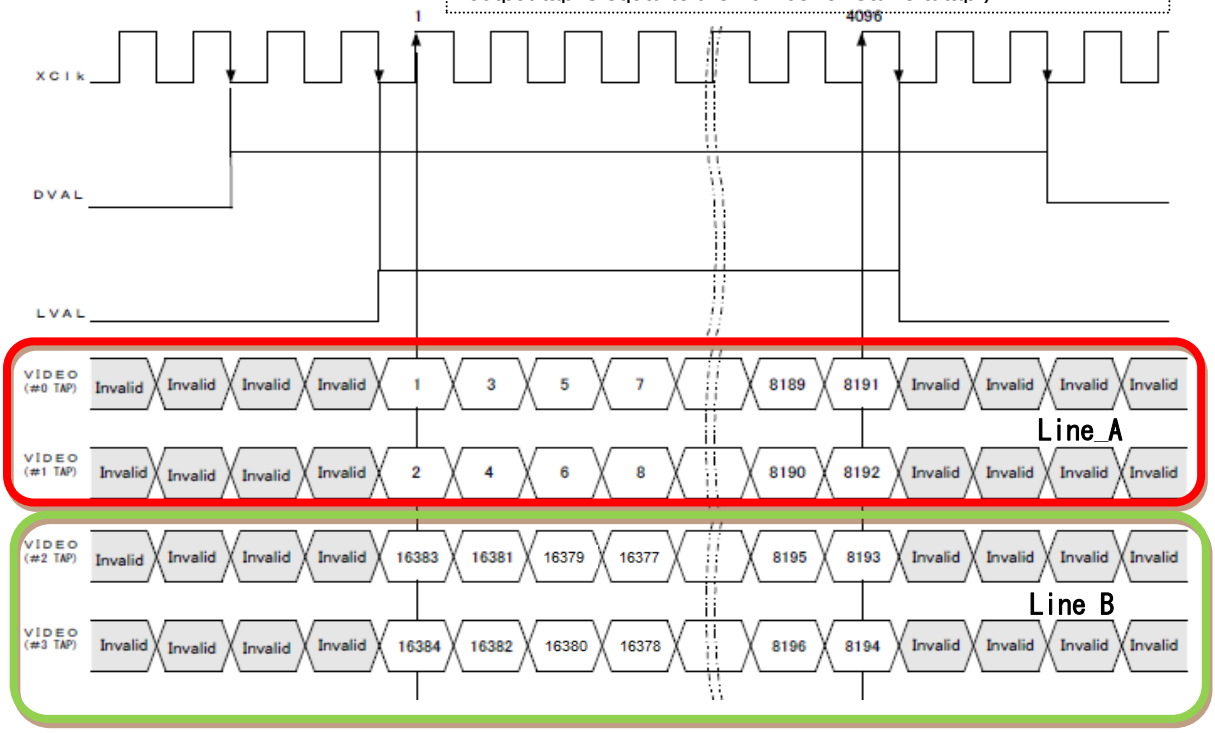

Figure 4-7-8 Video Output Phase of the Camera at XCM8085DLMT8(16384pixels_4tap)

■Sample for 2 Displays■

The sample of 2 displays (line A and line B) is shown below.

Note: The exposure time values must be set as follows.

Exposure time1(inta) ≧ Exposure time2(intb)”.

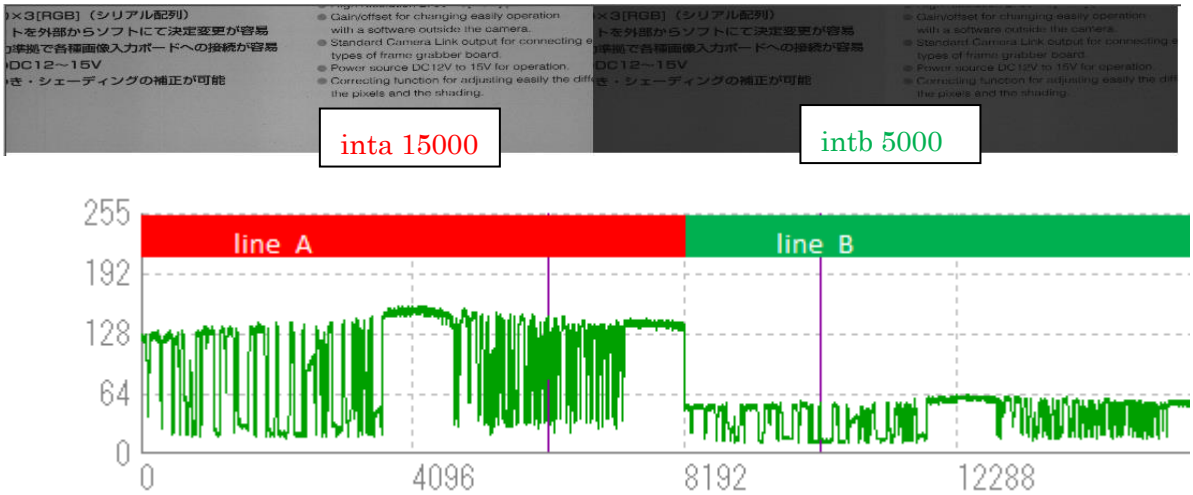

Figure 4-7-9 sample at XCM8085DLMT8(16384pixels_8tap)

4.8 Exposure Mode and Timing Chart

The camera has three exposure modes. The overview of each mode and the timing are as follows.

4.8.1 Free Run Exposure Mode (Programming time setting)

In free-run exposure mode, the camera generates its own internal control signal based on two programmable parameters, exposure time and readout time.

Table 4-8-1-1 Programmable Exposure Time

			85MHz	40MHz
p	Programmable exposure time	8192pixels_8tap	10.76～12336.2	23.65～26214.3
		8192pixels_4tap	22.04～12236.2	49.26～26214.3
		8192pixels_2tap	46.14～12236.2	100.45～26214.3
		4096pixels_4tap	10.76～12236.2	23.65～26214.3
		4096pixels_2tap	22.04～12236.2	49.26～26214.3
r	Readout time	8192pixels_8tap	12.05	25.60
		8192pixels_4tap	24.09	51.19
		8192pixels_2tap	48.19	102.40
		4096pixels_4tap	12.05	25.60
		4096pixels_2tap	24.09	51.19

(unit : μs)

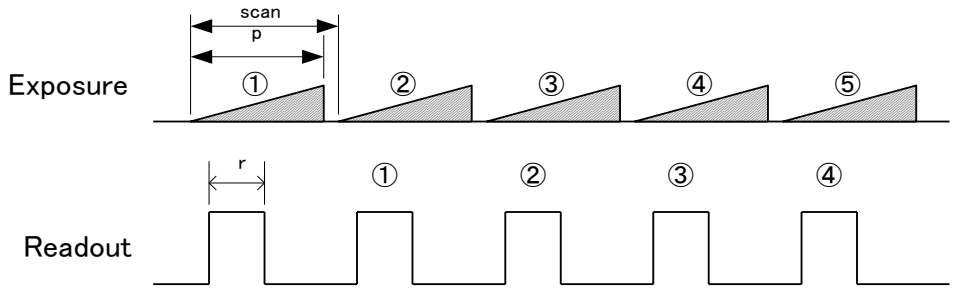

Figure 4-8-1-1 Free Run Exposure Mode

Note:
The readout is delayed one scan from exposure.

4.8.2 External Trigger Exposure Mode (External trigger edge)

In external trigger exposure mode (Trigger Edge), the exposure time is determined by the setting through the serial communication, each exposure starts with the rising edge and the line period is determined by the time from rising edge to rising edge of the trigger pulse. The range of programmable exposure time, the timing chart of the exposure and the readout are shown below.

Table 4-8-2-1 Programmable Exposure Time

			85MHz	40MHz
p	Programmable exposure time	8192pixels_8tap	10.76～12336.2	23.65～26214.3
		8192pixels_4tap	22.04～12336.2	49.26～26214.3
		8192pixels_2tap	46.14～12336.2	100.45～26214.3
		4096pixels_4tap	10.76～12336.2	23.65～26214.3
		4096pixels_2tap	22.04～12336.2	49.26～26214.3
r	Readout time	8192pixels_8tap	12.05	25.60
		8192pixels_4tap	24.09	51.19
		8192pixels_2tap	48.19	102.40
		4096pixels_4tap	12.05	25.60
		4096pixels_2tap	24.09	51.19
a	Trigger pulse H time	≧0.026		
b	Trigger pulse L time	≧0.026		
c	Trigger pulse cycle	8192pixels_8tap	≧12.906	≧25.800
		8192pixels_4tap	≧24.200	≧51.412
		8192pixels_2tap	≧48.295	≧102.600
		4096pixels_4tap	≧12.906	≧25.800
		4096pixels_2tap	≧24.200	≧51.412

(unit : μs)

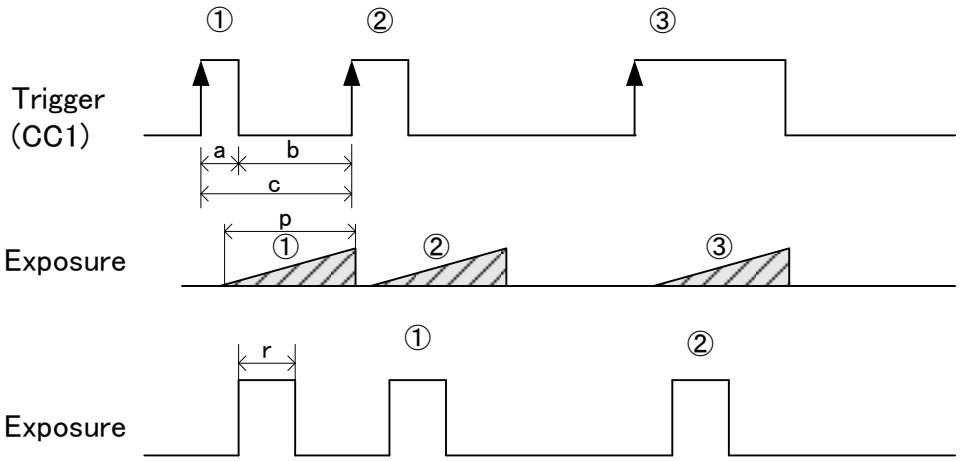

Figure 4-8-2-1 External Trigger (Trigger Edge) Exposure Mode

Note:

The readout is delayed one scan from exposure.

4.8.3 External Trigger Exposure Mode (Trigger Level)

In external trigger exposure mode (Trigger Level), the exposure time is determined by the high trigger pulse time, each exposure starts with the rising edge and the line period is determined by the time rising edge to rising edge of trigger pulse. The range of programmable exposure time, the timing chart of the exposure and the readout are shown below.

Table 4-8-3-1 Programmable Exposure Time (Trigger Level)

			85MHz	40MHz
r	Readout time	8192pixels_8tap	12.05	25.60
		8192pixels_4tap	24.09	51.19
		8192pixels_2tap	48.19	102.40
		4096pixels_4tap	12.05	25.60
		4096pixels_2tap	24.09	51.19
a	Trigger pulse High time	8192pixels_8tap	≧10.706	≧23.600
		8192pixels_4tap	≧22.000	≧49.212
		8192pixels_2tap	≧46.095	≧100.400
		4096pixels_4tap	≧10.706	≧23.600
		4096pixels_2tap	≧22.000	≧49.212
b	Trigger pulse Low time	≧2.200		
c	Trigger pulse cycle	8192pixels_8tap	≧12.906	≧25.800
		8192pixels_4tap	≧24.200	≧51.412
		8192pixels_2tap	≧48.295	≧102.600
		4096pixels_4tap	≧12.906	≧25.800
		4096pixels_2tap	≧24.200	≧51.412

(unit：μs)

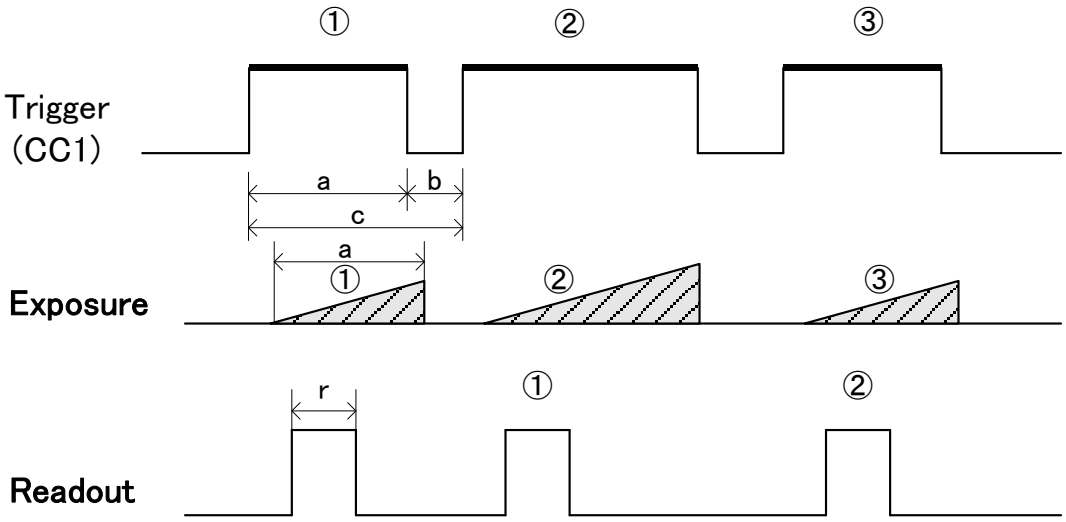

Figure 4-8-3-1 External Trigger (Trigger Level) Exposure Mode

Note:

The readout is delayed one scan from exposure.

4.9 Setting Offset

In the figure below, the horizontal axis indicates the amount of incident light and the vertical axis indicates the output.

Fs shows the output at saturation. Dd shows the output at darkness. (Both Fs and Dd are digital.) Se shows the saturation current, or the amount of exposure when the output saturates.

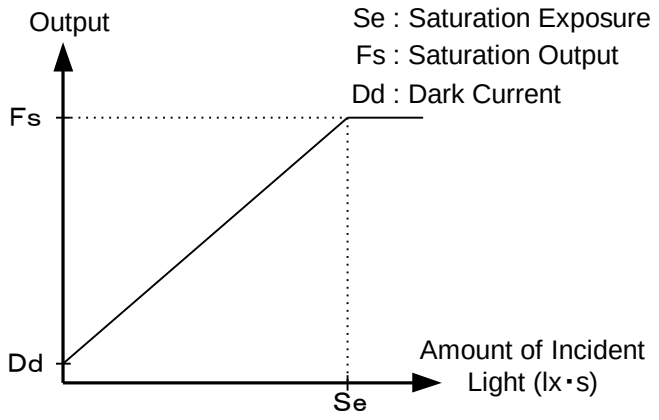

Figure 4-9-1 Saturation Exposure and Dark Current Output

By setting the offset, you can set the Y-intercept arbitrarily. DF shows the digital offset value. The gradient of the line does not change.

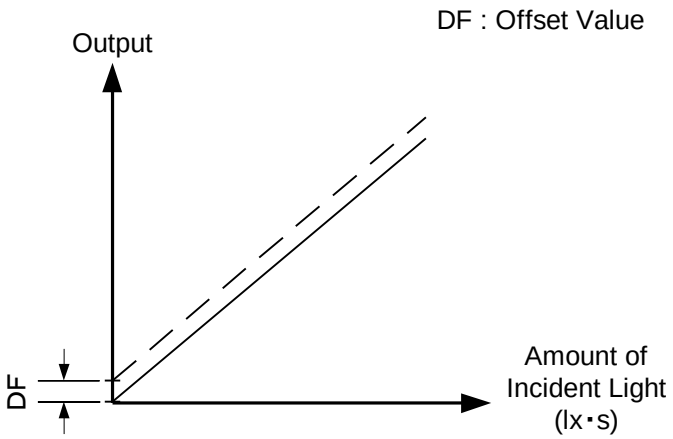

Figure 4-9-2 Offset Adjustment

◆ Adjust amount of offset in accordance with the requirements of your camera system.

4.10 Setting Gain

The camera can adjust the analog gain (x1 to x17.8 in 8 steps) and the digital gain. As shown in the figure below, increasing the gain setting increases the gradient of the camera's response curve and results in a higher camera output for a given amount of light. Analog gain can be changed by sending the "gax" command. Digital gain can be changed by sending the "gdx" command.

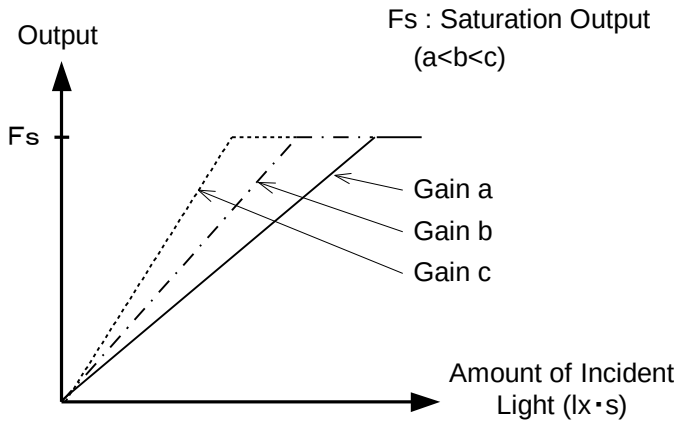

Figure 4-10-1 Gain Adjustment

- Gain and noise values are proportionally related.
- Adjust the amount of gain in accordance with the requirements of your camera system.

Table 4-10-1 Gain-Sensitivity

gax	Analog Amplifier		Sensitivity (V/lx・s)
0	x1.0	0.0dB	125
1	x1.8	5.0dB	225
2	x3.4	10.7dB	425
3	x5.2	14.3dB	650
4	x6.4	16.1dB	800
5	x7.8	17.9dB	975
6	x9.7	19.7dB	1213
7	x17.8	25.0dB	2225

Note:
Digital gain x1, Pixel correction default (Factory white correction data, Correction level 200 DN / 8 bit)

A low gain setting (x1.0-x5.2) is recommended when you use 2display-mode, padding setting (except 0), or high scan rate.
In addition, gain setting x1.0 is recommended for reducing noise as noise is lower when gain is low. Keep in mind that illumination with higher brightness may be required as sensitivity becomes low.

4.11 Pixel Correction

As a rule, image sensors (CCD, CMOS and so on) have fixed pattern noise and photo response non-uniformity. Lens shading and light sources can also cause non-uniformity. The camera is set to the optimal correction before shipping in order to provide images of the highest grade.

The camera also has a user white correction function to cope with lens shading and non-uniform illumination, or to be able to completely clear the uneven brightness generated by changing the spectral response level of the light source. Cal_bl: Output data of each pixel at perfectly dark (digital) Cal_wh: Output data of each pixel in uniform illumination (digital) Target_Val : Target value for correction (10bit digital) Vin :Input data (digital) Vout :Output data (digital) The corrected data is expressed in the following equation. Vout= (Vin-Cal_bl) x Target_val / (Cal_wh-Cal_bl)

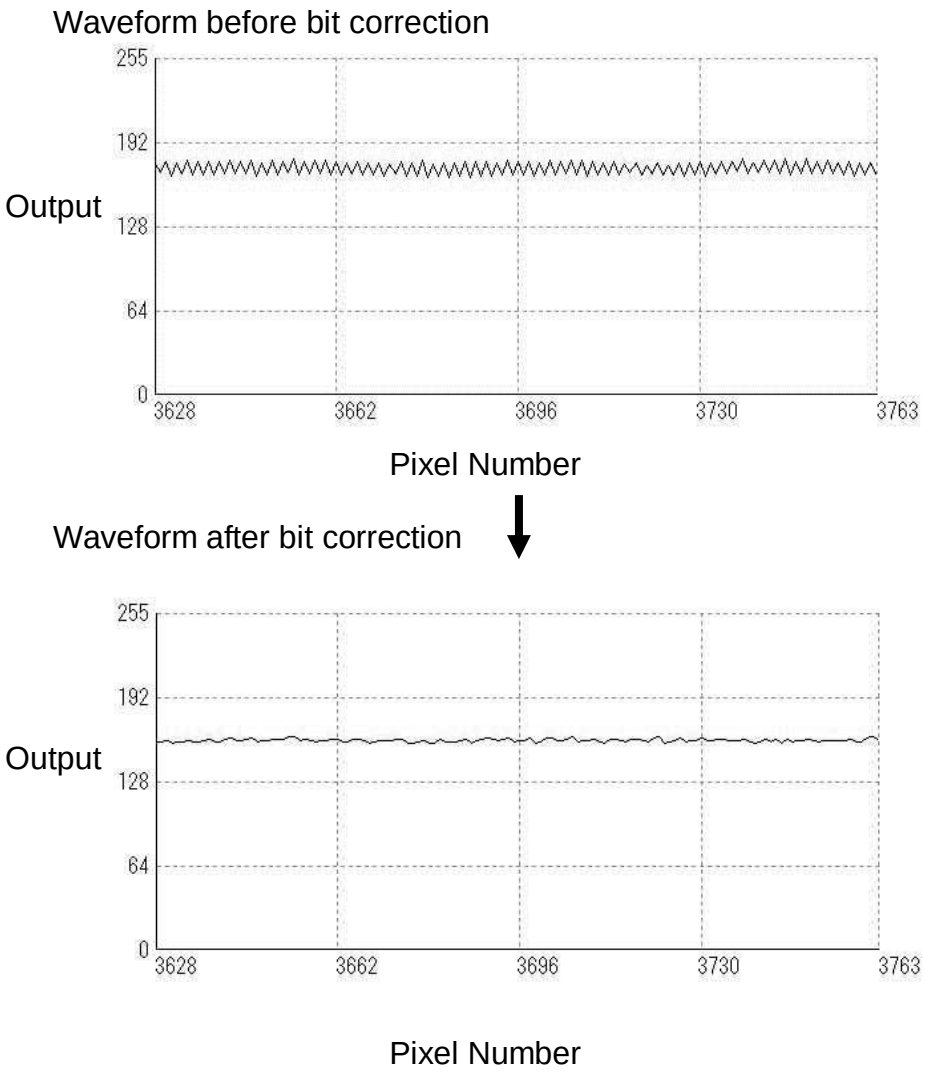

Figure 4-11-1 Waveform before and after bit correction

4.11.1 Command Settings

Set the correction on or off, acquire user white correction data by sending commands through serial communication.

Examples of command settings

shc 0,200: Factory black correction only
shc 1,200: Factory white correction + factory black correction (Setting at the shipment)
shc 2,200: User arbitrary white correction + factory black correction
shc 4,200: Factory white correction + user arbitrary black correction
shc 5,200: User arbitrary white correction + user arbitrary black correction
blk : Acquisition of user arbitrary black correction data
wht: Acquisition of user arbitrary white correction data

4.11.2 How to correct

(1) Remove the lens cap and place a white object. Then you can acquire user white correction data. With a lens, the shading by both the lens and the light source will be simultaneously corrected. At this time, please defocus a little to avoid being affected by the non-uniformity of the object.

(2) Send the “wht CR” command through serial communication.

(3) Confirm that the camera returns “>OK” and “>wht”. Thus user white correction data is saved and loaded to the camera.

(4) Send the “shc 2 VAL CR” command through serial communication. Then the user white correction will be on and set the correction level as “VAL”.

4.12 Test Pattern

This camera can generate a test pattern. Use the test pattern to verify the proper timing and connections between the camera and the frame grabber board.

The test pattern of XCM8085DLMT8, (10 bit 8192 Pixels) is as follows.

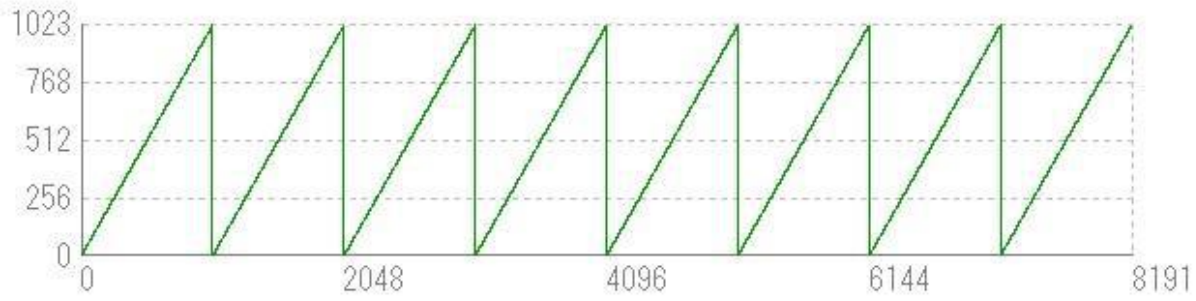

Figure 4-12-1 Test Pattern of XCM8085DLMT8(10bit)

In 10-bit mode, from pixel 0, 10 bit data is output in order (0,1,2,3... 1023), repeating eight times.

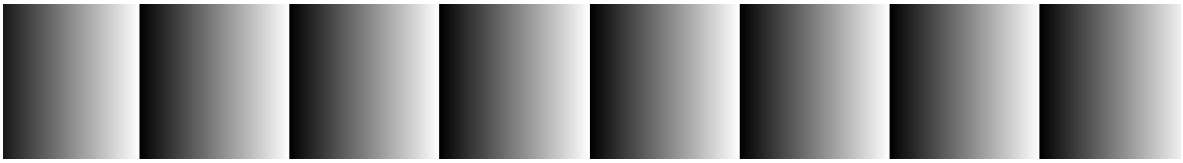

Figure 4-12-2 Test Image of XCM8085DLMT8(10bit)

In 8-bit mode, from pixel 0, 8-bit data is output in order (0,0,0,01,1,1,1,2,2,2,2,3... 255,255,255,255), repeating eight times.

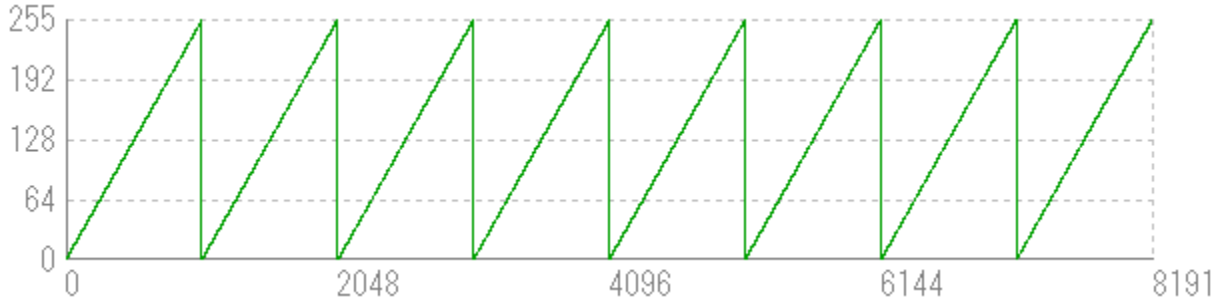

Figure 4-12-3 Test Pattern of XCM8085DLMT8(8bit)

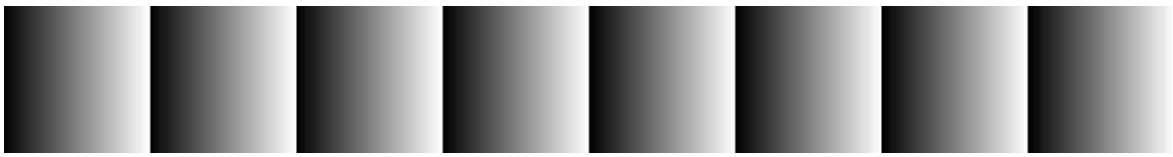

Figure 4-12-4 Test Image of XCM8085DLMT8(8bit)

4.13 Line Delay Setting

Two(2) line sensors of this camera are located laterally at one line interval.

Therefore, in dual line mode each output data produces the image which is delayed for one pixel in movement direction in case of an image of 1:1 reduced scale ratio of length and width.

This can be used for correcting the deviation of delay between each output datas at the unit of one line.

For example, when an imaging object moves from the bottom to the upper direction for a camera in case of an image of 1:1 reduced scale ratio of length and width and “d□1” of command is sent, the image can be corrected on the deviation of delay. When an imaging object moves from the top to the lower direction, “d□-1” as of command should be sent.

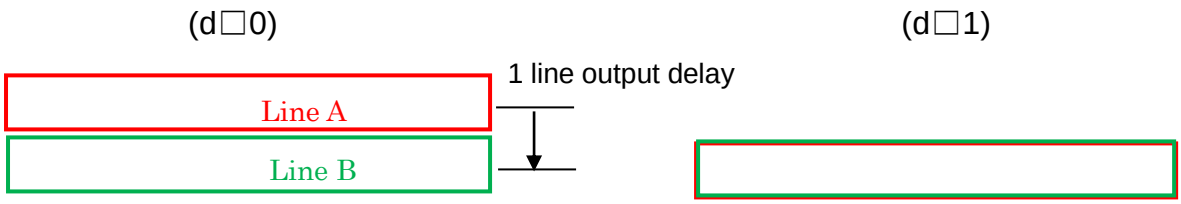

Figure 4-13-1 Line Delay Correction

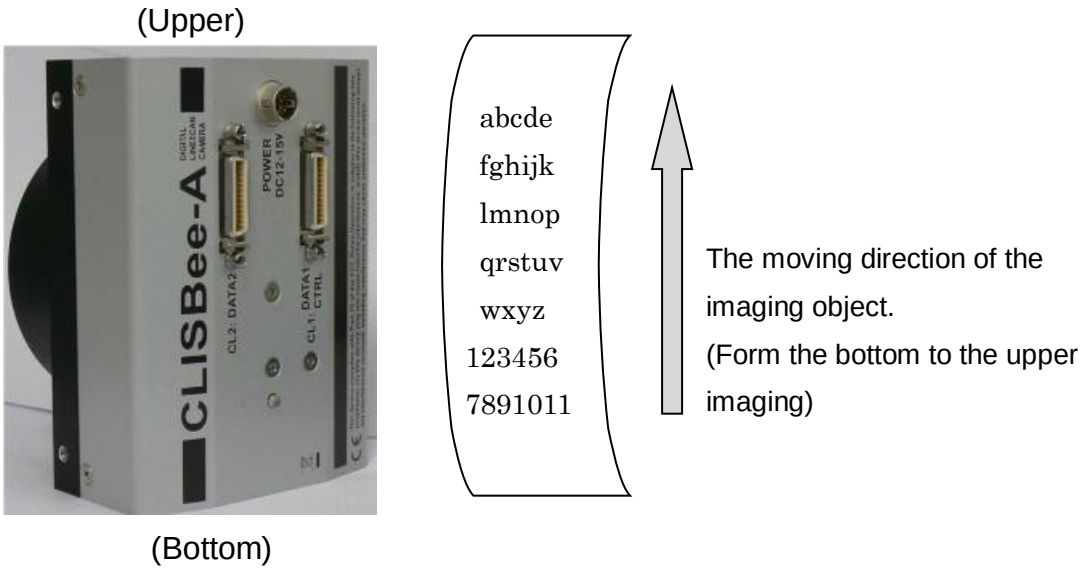

Figure 4-13-2 Camera Setting and Line Delay(d□1)

5 Sensor Handling Instructions

5.1 Electrostatic Discharge and the Sensor

CMOS sensors are susceptible to damage from electrostatic discharge and can become defective.

5.2 Protecting Against Dust, Oil and Scratches

The CMOS sensor window is part of the optical path and should be handled like other optical components with care. If you use the camera in a dusty area, prepare a dust-proof enclosure. Dust can obscure pixels, producing dark lines on the image.

5.3 Cleaning the Sensor Window

Dust: Can usually be removed by blowing the window surface using a compressed air blower.

Oil: Wipe the window with a lint-free cloth wiper moistened with ethyl alcohol carefully and slowly.

6 Troubleshooting

The following pages contain several troubleshooting charts that can help you find the cause of problems user sometimes encounters.

6.1 When there is no Image

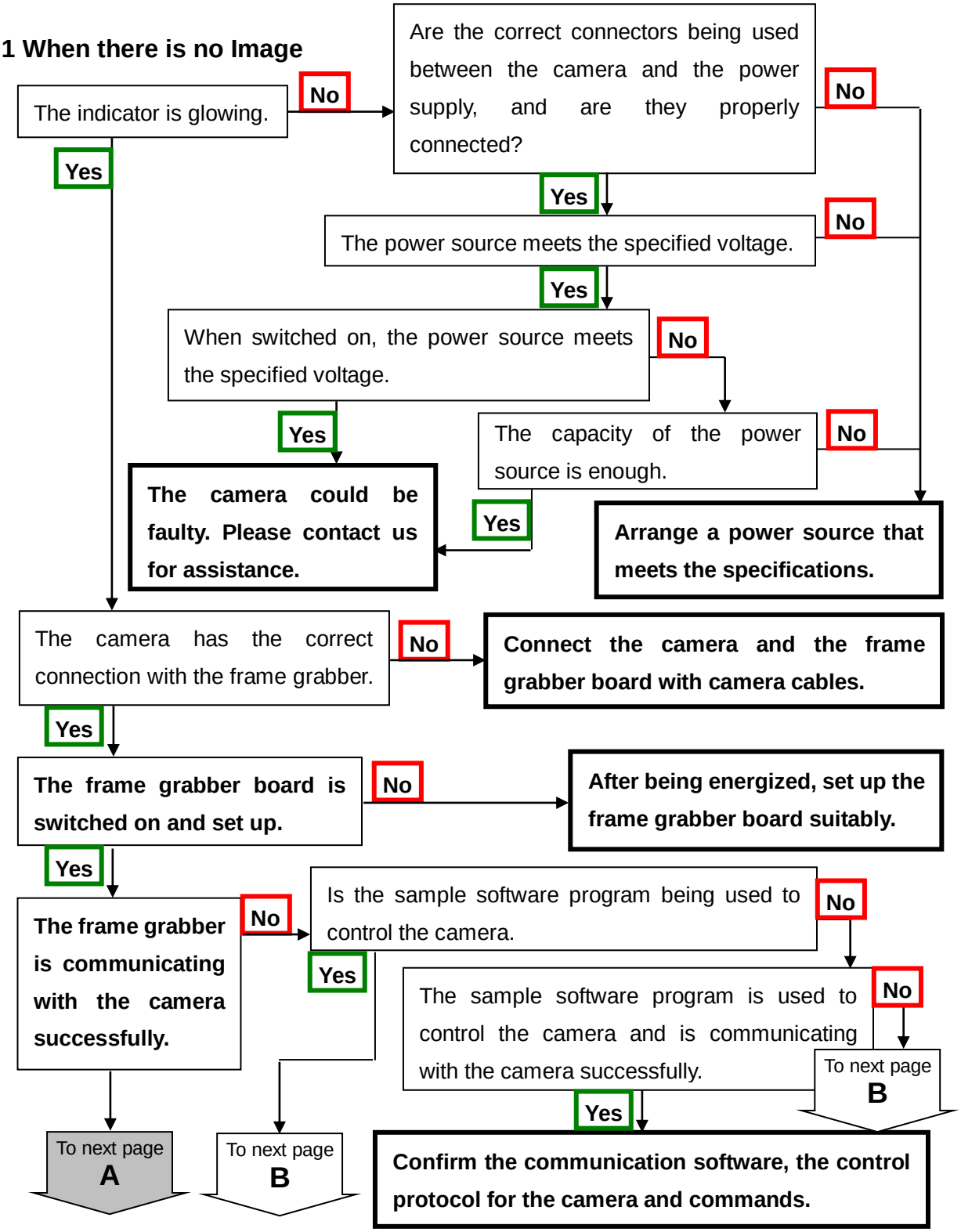

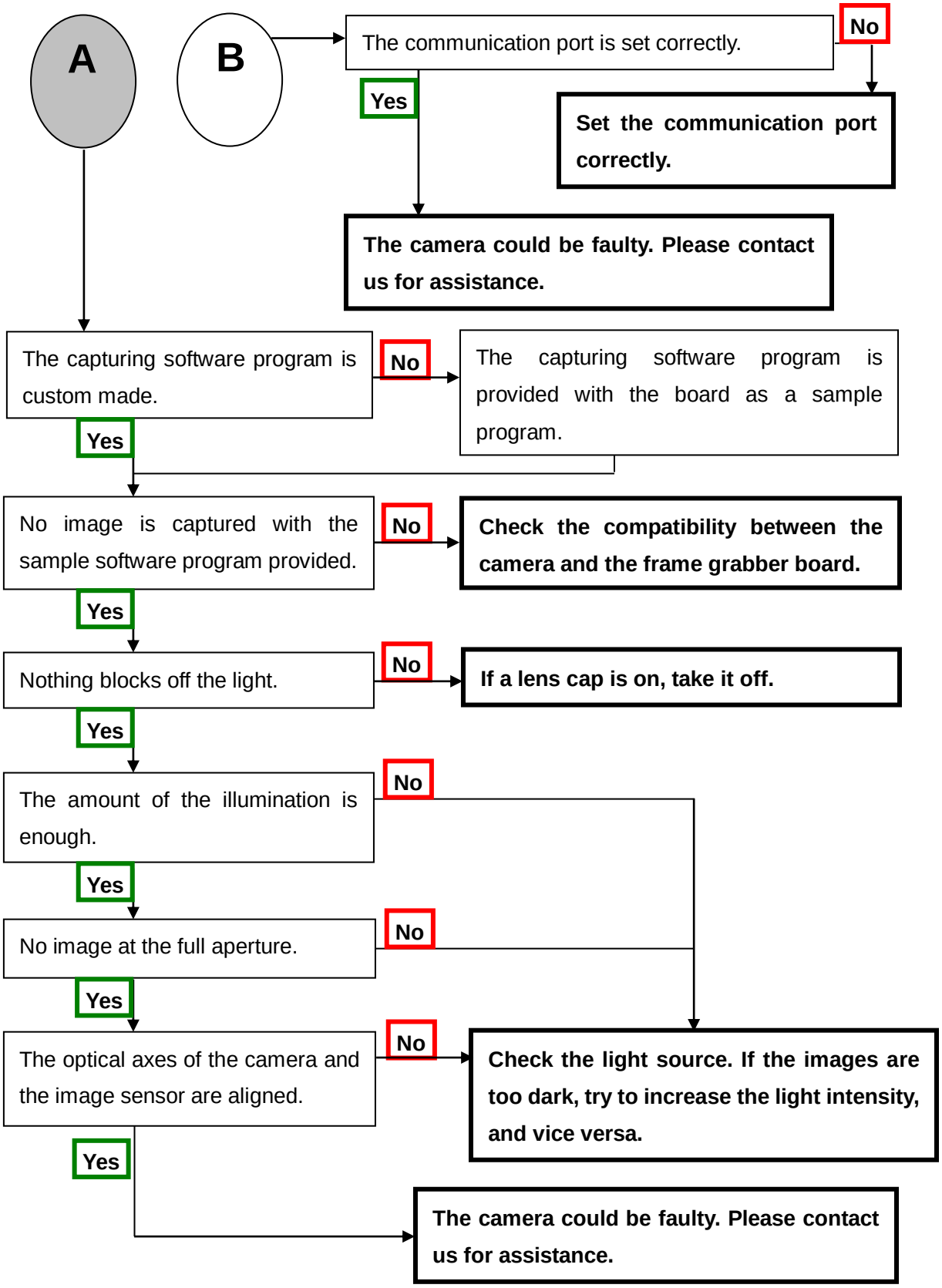
A
B
The communication port is set correctly.
No
Yes
Set the communication port correctly.
The camera could be faulty. Please contact us for assistance.
The capturing software program is custom made.
No
The capturing software program is provided with the board as a sample program.
Yes
No image is captured with the sample software program provided.
No
Check the compatibility between the camera and the frame grabber board.
Yes
Nothing blocks off the light.
No
If a lens cap is on, take it off.
Yes
The amount of the illumination is enough.
No
Yes
No image at the full aperture.
No
Yes
The optical axes of the camera and the image sensor are aligned.
No
Check the light source. If the images are too dark, try to increase the light intensity, and vice versa.
Yes
The camera could be faulty. Please contact us for assistance.

6.2 When Noise is present in the Image

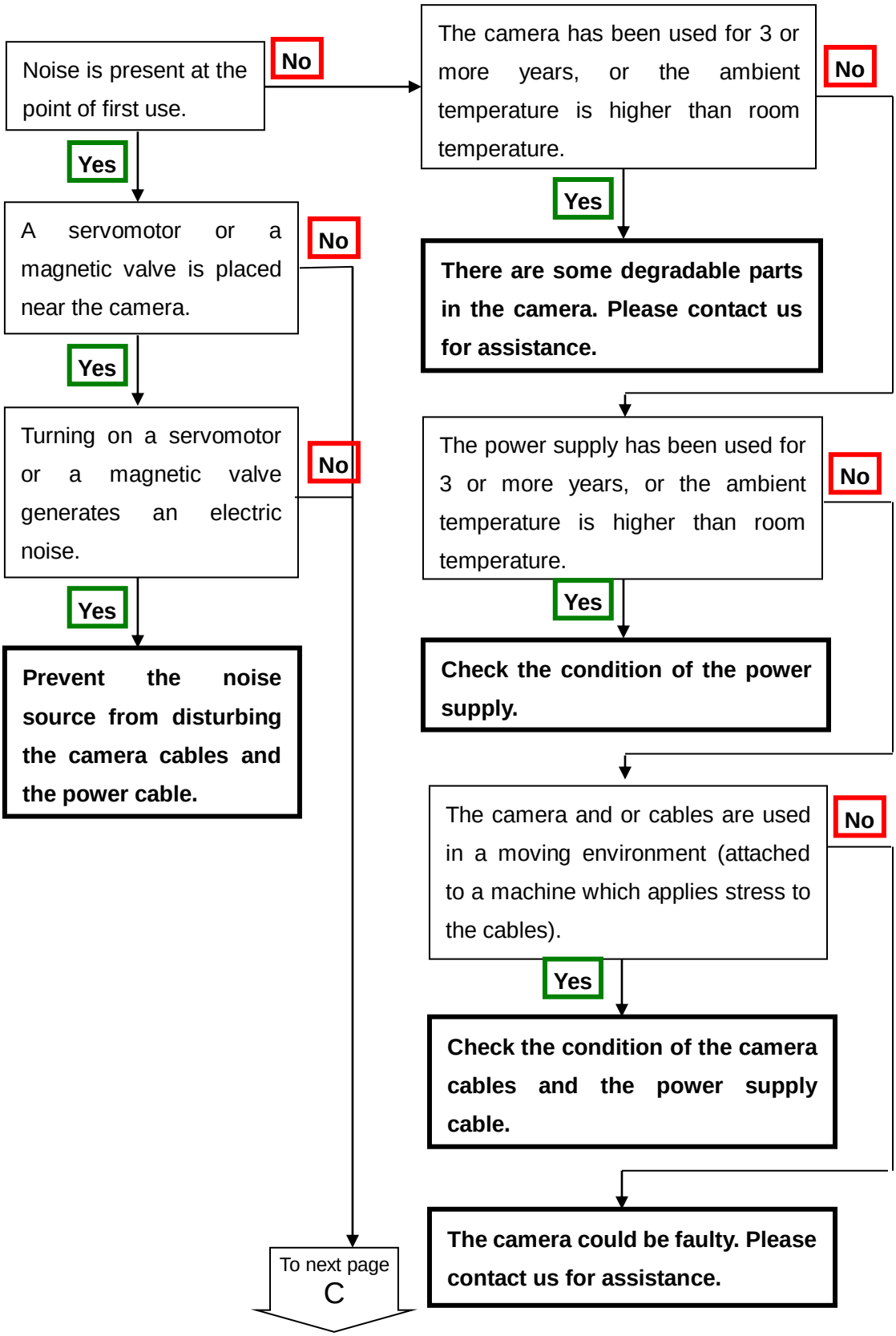

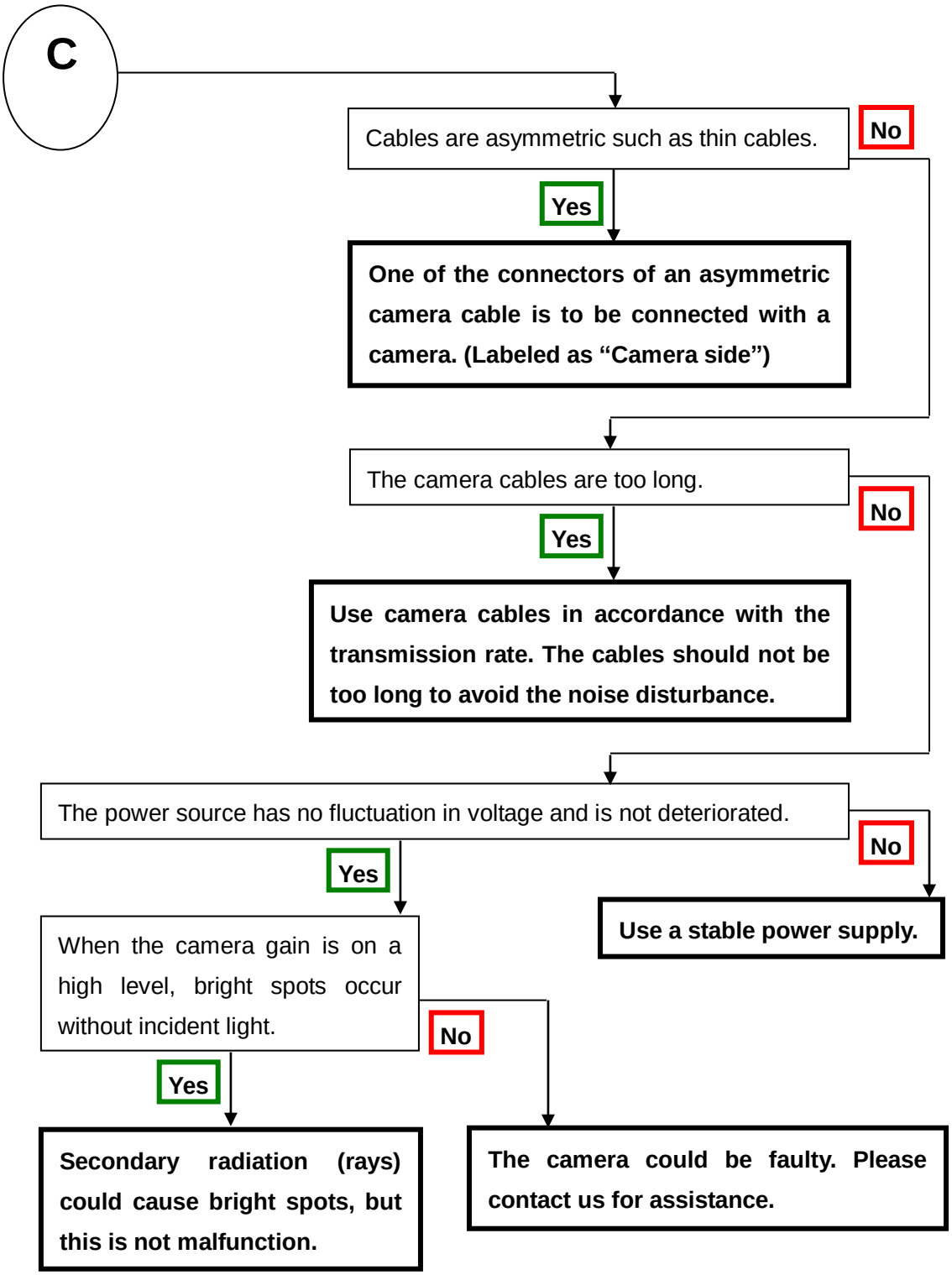
C
Cables are asymmetric such as thin cables.
No
Yes
One of the connectors of an asymmetric camera cable is to be connected with a camera. (Labeled as “Camera side”)
The camera cables are too long.
No
Yes
Use camera cables in accordance with the transmission rate. The cables should not be too long to avoid the noise disturbance.
The power source has no fluctuation in voltage and is not deteriorated.
No
Yes
Use a stable power supply.
When the camera gain is on a high level, bright spots occur without incident light.
No
Yes
Secondary radiation (rays) could cause bright spots, but this is not malfunction.
The camera could be faulty. Please contact us for assistance.

6.3 When the Camera becomes hot

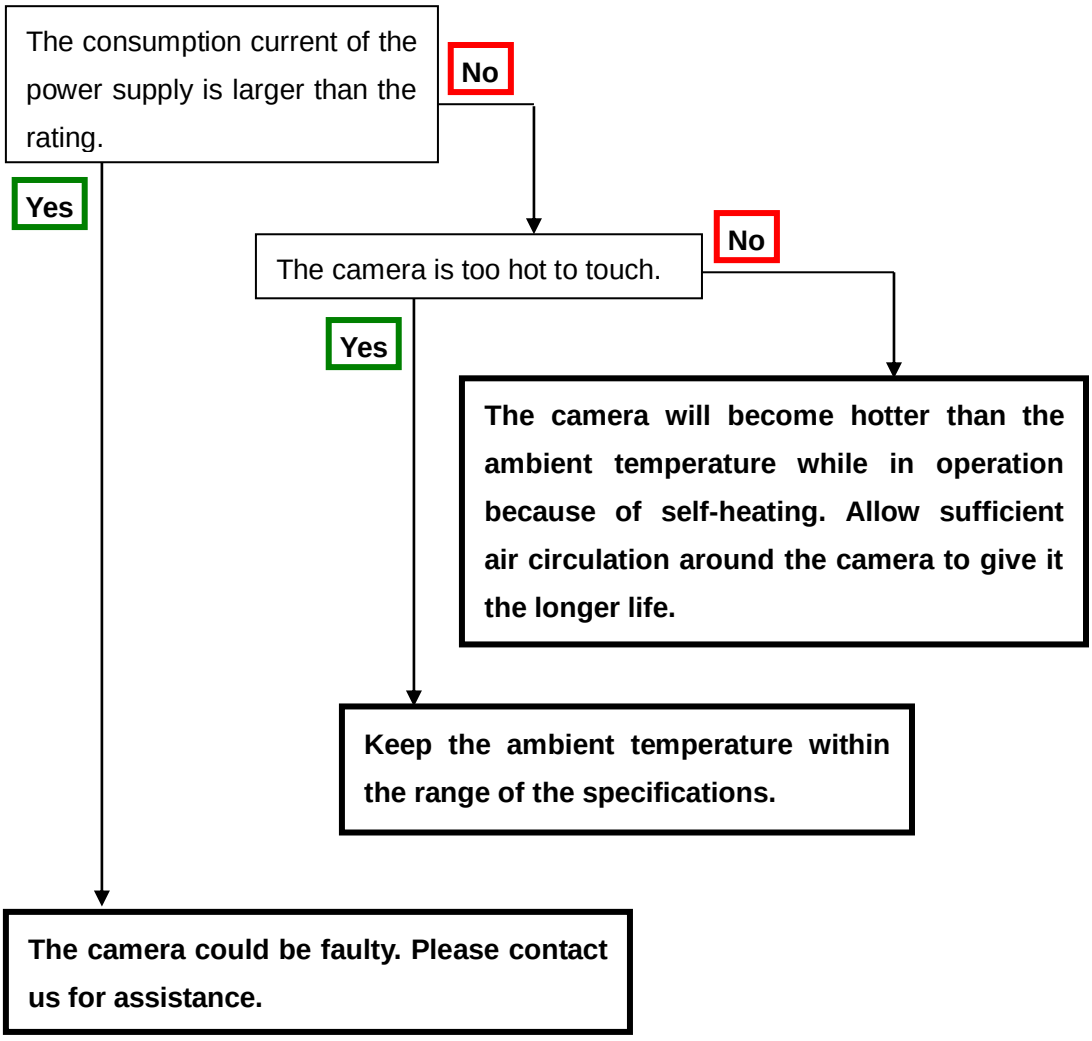

7 Others

7.1 Notice

- No part of this document may be reproduced in any form, in whole or in part, without the expressed written consent of NED.
- Contents of this document are subject to change without prior notice.
- Every care has been taken in the preparation of this User's Manual. If you should discover any errors or omissions, please notify your nearest NED representative.

7.2 Contact for support

Nippon Electro-Sensory Devices Corporation

Head Office
2-5-12, Itachibori, Nishi-ku, Osaka 550-0012, Japan
Phone +81-6-6534-5300
Fax +81-6-6534-6080

Tokyo Branch
Gibraltar Oi BLDG., Room No.402
1-45-2, Oi, Shinagawa-ku, Tokyo 140-0014, Japan
Phone +81-3-5718-3181
Fax +81-3-5718-0331

Nishi-Nippon Branch
Twin Square 1-8-28 Enokida, Hakata-ku, Fukuoka, 812-0004, Japan
Phone +81-92-451-9333
Fax +81-92-451-9335

URL
http://ned-sensor.co.jp/

E-Mail
sales@ned-sensor.com

7.3 Product Support

If there is still a problem with your camera after checking it in accordance with the troubleshooting guide, turn off the power and call your NED representative.

In such case, please inform us of the status of the camera. You can get the status by

(1) executing the “sta” command, or

(2) clicking “Memory Dump” button when using CLISBeeCtrl.

The example of the camera status.

```
sta
>OK
>Type=XCM8085DLMT8
>Ver.=1.04_0x0138
>Serial=0
>gax 0
>gdx 0
>odx 0
>inm 0
>int 1,10000
>pad 0
>shc 1,200
>tpn 0
>rev 0
>voa 0,0
>d 0
>tap 8
>disp 0
>vod 1
>clk 0
>inta 10000
>intb 10000
>sta
```

Revision History

Revision Number	Date	Changes
01	24 December 2015	Initial release.
02	13 April 2016	Added the function to switch the data rate.
03	8 June 2016	Digital offset (0.5DN/step)
04	1 November 2016	P1 Photograph change P61 An uppre bottom reverses a photograph.
05	23 February 2018	Modified the model number of the power cable
06	25 Jul.2018	Deleted The description on the Camera Control Software.